AGENDA

Lincoln City Planning Commission
Tuesday, July 5, 2022, 6:00 PM
Council Chambers,
801 SW Highway 101 - 3rd Floor, Lincoln City, OR 97367

1. CALL TO ORDER, PLEDGE OF ALLEGIANCE, & ROLL CALL

2. AGENDA CHANGES OR REVISIONS

3. MINUTES

3.1. Planning Commission - Regular Meeting - May 17, 2022 6:00 PM

4. FINAL ORDERS, RESOLUTION, & WRITTEN COMMUNICATIONS

5. PUBLIC HEARINGS/DELIBERATIONS

5.1. CUP 2022-04 SE Lee Pump Station

5.2. EXT 2022-01 The Cove - time extension

6. OLD BUSINESS

7. NEW BUSINESS

8. PLANNING COMMISSION TRAINING

9. REPORTS AND COMMENTS

10. FUTURE AGENDA ITEMS & NEXT MEETINGS

11. ADJOURN

*All information for this meeting is available on the City of Lincoln City website at **www.lincolncity.org,** and this meeting will be televised live on Charter Channel 4 Lincoln City and rebroadcast at various times. Planning Commission meetings are streamed live on the Internet through a link on the City of Lincoln City website, and can also be viewed following the meeting. The meeting location is accessible to persons with disabilities. A request for an interpreter for the hearing impaired, for a hearing impaired device, or for other accommodations for persons with disabilities, should be made at least 48 hours in advance of the meeting to the City Recorder, at 541-996-1203.*

LINCOLN CITY PLANNING COMMISSION
MINUTES
May 17, 2022

1. CALL TO ORDER, PLEDGE OF ALLEGIANCE, & ROLL CALL

Chair Kim Blackerby called the May 17th Lincoln City Planning Commission meeting to order at 6:01 PM, followed by the Pledge of Allegiance and Roll Call.

Attendee Name	Title	Status	Arrived
Glenn Johnson	Commissioner	Excused	
Mellissa Sumner	Commissioner	Present	
Marci Baker	Commissioner	Present	
Robert Vincent	Commissioner	Present	
Kim Blackerby	Chair	Present	
Miles Schlesinger	Commissioner	Present	

2. AGENDA CHANGES OR REVISIONS

There were no changes to the Agenda.

3. MINUTES

3.1. Planning Commission - Regular Meeting - May 3, 2022

MOTION:	Approve May 3, 2022 minutes with the two minor edits from Commissioner Baker
MOVER:	**Vincent**
SECONDER:	**Schlesinger**
AYES:	Sumner, Baker, Vincent, Blackerby, Schlesinger
EXCUSED:	Johnson
RESULT:	**Passed**

4. FINAL ORDERS, RESOLUTION, & WRITTEN COMMUNICATIONS

4.1. FO 2022-05 for CUP 2022-01 Resnikoff dock

Commissioner Robert Vincent moved to approve Final Order 2022-05 for CUP 2022-01 denying the dock request. Commissioner Baker seconded. Approved unanimously.

MOTION:	**Approve FO 2022-05 for CUP 2022-01 Resnikoff dock**
MOVER:	**Vincent**
SECONDER:	**Baker**
AYES:	Sumner, Baker, Vincent, Blackerby, Schlesinger
EXCUSED:	Johnson
RESULT:	**Passed**

4.2. FR 2022-15 for ZOA 2022-08 Housing

Commissioner Baker requested that language be added to the Final Recommendation for ZOA 2022-08 based on the discussion from the May 3rd Planning Commission meeting to allow any non-profit "that has staff with at least two years' (or seasons) experience running emergency shelter facilities." The Final Recommendation was unanimously approved with this amendment included.

MOTION:	**Approve FR 2022-15 for ZOA 2022-08 Housing with Commissioner Baker's additional language**
MOVER:	**Baker**
SECONDER:	**Vincent**
AYES:	Sumner, Baker, Vincent, Blackerby, Schlesinger
EXCUSED:	Glenn Johnson
RESULT:	**Passed**

5. PUBLIC HEARINGS/DELIBERATIONS

5.1. VAR 2022-03 Weston - continued to June 21, 2022

This item was continued to June 21, 2022.

MOTION:	**VAR 2022-03 Weston - continued to June 21, 2022**

5.2. CUP 2022-03 Taft HS Sign

Chair Blackerby opened the public hearing at 6:07 PM, introduced the application, read the required statements, and explained the order of proceedings for the hearing. No one was excused for conflicts of interest, no challenges were offered. Director Anne Marie Skinner listed the applicable substantive criteria.

Director Skinner presented a summary of the staff report for the application. The Lincoln County School District is requesting a conditional use permit to install an electronic display center at Taft 7-12 High School, located at 3780 SE Spyglass Ridge Drive. No comments were received.

Susan Graves, Safety Coordinator for Lincoln County School District, provided a brief overview of the need for the electronic display center, and shared maps and drawings detailing the proposal. She was accompanied by Dr. Karen Gray, Superintendent of Lincoln County School District.

Commissioner Vincent stated that he felt it was a great idea.

Responding to a question from Commissioner Baker, Ms. Graves clarified that the design was not a single-panel sign with front and back components, but was proposed to be at right angles so that people coming from different directions would be able to see and read the sign.

Director Skinner responded, noting that her review had assumed that there was only a single double-sided panel, and that additional review of the code would be required. Superintendent Gray assured the Commission that they were willing to comply with whatever the code required, but that they were hopeful for an immediate answer so that they could move quickly on placing the order for the sign.

Responding to a question from Chair Blackerby regarding the removal of two shore pine trees, the school district's representatives agreed to provide appropriate landscaping.

Chair Blackerby closed the public hearing at 6:52 PM.

The Planning Commission voted unanimously to approve CUP 2022-03 for the Taft 7-12 High School electronic display center with the staff's recommended conditions and the additional condition to landscape the sign area with living ground cover.

Director Skinner clarified that formal approval through a Final Order would be on the agenda for the next Planning Commission meeting.

MOTION:	**Approve CUP 2022-03 Taft HS Sign with conditions noted in the staff report and the additional condition to landscape the sign area with living ground cover**
MOVER:	**Sumner**
SECONDER:	**Vincent**
AYES:	Sumner, Baker, Vincent, Blackerby, Schlesinger
EXCUSED:	Johnson
RESULT:	**Passed**

5.3. CUP 2022-02 Rainbow Villa

Chair Blackerby opened the public hearing at 7:00 PM, introduced the application, read the required statements and explained the order of proceedings. No one was excused for conflicts of interest, and no challenges were offered. Director Skinner listed the applicable substantive criteria.

Director Skinner presented a summary of the staff report. The owners of the property at 4230 and 4250 SE Highway 101 are requesting a conditional use permit for a 46-unit multiple-unit residential development. Comments were received from the Oregon Department of Transportation and North Lincoln Sanitary Service, and Public Works submitted a list of recommended conditions of approval.

Gene Pfeifer, a design-build specialist, presented on behalf of the property owners. He highlighted several key aspects of the proposal, including a green roof, sizable balconies, preservation of existing trees, a rooftop patio, and a signature color scheme.

Responding to a question from Commissioner Vincent Mr. Pfeifer stated that the existing bus stop would remain. Responding to a question from Commissioner Baker, Mr. Pfeifer clarified that all of the units would be equipped with kitchens. He added that the project includes six two-bedroom units, 13 one-bedroom units, and 22 studios. Chair Blackerby suggested that some accommodation of the existing residents be considered as the project moves forward.

Chair Blackerby closed the public hearing at 7:41 PM.

The Planning Commission voted unanimously to approve CUP 2022-02 for Rainbow Villa with the conditions listed in the staff report.

Following this initial vote, Director Skinner provided recent input from Public Works regarding the condition to install a rectangular rapid flashing beacon (RRFB). Director Skinner noted that there isn't proportionality to require this specific project to install an entire RRFB and suggested a proportional in-lieu fee payment instead of an entire installation.

Commissioner Sumner moved to amend the motion for CUP 2022-02 to reflect the appropriate proportionality in-lieu fee payment for an RRFB, rather than entire installation. The motion was seconded by Commissioner Vincent.

MOTION:	**Approve CUP 2022-02 Rainbow Villa with the conditions listed in the staff report and the change to the RRFB from entire installation to a proportional in-lieu fee payment**
MOVER:	**Sumner**
SECONDER:	**Vincent**
AYES:	Sumner, Baker, Vincent, Blackerby, Schlesinger
EXCUSED:	Johnson
RESULT:	**Passed**

6. OLD BUSINESS

There was no old business to discuss.

7. NEW BUSINESS

There was no new business to discuss.

8. PLANNING COMMISSION TRAINING

There was no training.

9. REPORTS AND COMMENTS

Director Skinner provided a status update on outreach efforts for the development of the Comprehensive Plan Update. Staff are continuing to receive completed community questionnaires, primarily via the online version. Specific materials have been developed and distributed for outreach to the Hispanic community, high school students, and senior adults. Responses to the questionnaire will continue to be tallied through the end of May, at which time results will be published on the City website and shared with the Planning Commission, likely at one or both of the July meetings.

10. FUTURE AGENDA ITEMS & NEXT MEETINGS

Director Skinner requested updates on the Commissioners' summer schedules. Chair Blackerby will be missing the June 7, June 21, July 5, and August 2 meetings. Commissioner Sumner will miss the June 7 and June 21 meetings. Responding to a question from Commissioner Baker, Director Skinner provided an update regarding the selection of a new Planning Commissioner. Interviews are being held, but a new appointment will not be made in time for the June 7 meeting. One Conditional Use Permit for a City project had been tentatively scheduled for the June 7th meeting, along with final approval for CUP 2022-02 Rainbow Villa and 2022-03 Taft High School Sign.

Commissioner Baker made a motion to give authority to Chair Blackerby to sign the Final Orders for Conditional Use Permits 2022-02 (Rainbow Villa) and 2022-03 (Taft HS Sign) outside of the June 7, 2022 meeting. The motion was seconded by Commissioner Sumner and passed unanimously.

11. ADJOURN

Chair Blackerby adjourned the meeting at 7:58 PM.

Respectfully submitted,

Anne Marie Skinner	Kim Blackerby
Planning Director	Chair

Planning Commission Communication

CUP 2022-04 SE Lee Pump Station

Meeting Date:	July 5, 2022	Primary Staff Contact:	AnneMarie Skinner
Department:	Planning Commission	E-Mail:	ASkinner@lincolncity.org
Secondary Dept:		Secondary Contacts:	
Approval:		Estimated Time:	

Attachments:

CUP 2022-04 Application (PDF)
CUP 2022-04 Narrative (PDF)
CUP 2022-04 Plans (PDF)
CUP 2022-04 Staff Report (DOCX)
CUP 2022-04 Site Map (BMP)
CUP 2022-04 Zoning Map (BMP)

Conditional Use Application

PROPERTY OWNER/CONTRACT PURCHASER (as listed on deed OR purchase contract):

Copy of purchase contract must be included with submittal for application to be accepted.

NAME: City of Lincoln City
ADDRESS: 801 SW Highway 101
541-996-2151
PHONE:
E-MAIL:

APPLICANT:

NAME: Lincoln City Public Works
ADDRESS: 801 SW Highway 101
541-996-2151
PHONE:
E-MAIL: Dwentz@lincolncity.org

SITE INFORMATION:

ZONING DISTRICT: Multi-family Residential (RM)
TAX MAP AND LOT: 07-11-22-AD-00100-00
SITE ADDRESS: 2010 SE Lee Ave

REQUESTED CONDITIONAL USE:

Cite the code section of the proposed conditional use: **LCMC 17.** 20.040

TO GRANT ANY CONDITIONAL USE, THE PLANNING COMMISSION MUST FIND, BASED UPON EVIDENCE BOTH FACTUAL AND SUPPORTIVE THAT IS PROVIDED BY THE APPLICANT, THAT ALL THE FOLLOWING ARE TRUE:

LCMC 17.77.060.D.1 – *The proposal is in compliance with the comprehensive plan;*

LCMC 17.77.060.D.2 – *The site for the proposed use is adequate in size and shape to accommodate the use and all required setbacks, common spaces, retaining walls, parking and loading areas, landscaping, and other features required by this title;*

LCMC 17.77.060.D.3 – *The site for the proposed use relates to streets and highways adequate in width and degree of improvement to handle the quantity and kind of vehicular traffic that would be generated by the proposed use;*

LCMC 17.77.060.D.4 – *The proposed use will have minimal adverse impact upon adjoining properties and the improvements thereon. In making this determination, the review authority shall consider, but not be limited to, the proposed location of the improvements on the site, vehicular egress/ingress and internal circulation, pedestrian access, setbacks, height and mass of buildings, retaining walls, fences, landscaping, screening, exterior lighting, and signage;* ***and***

LCMC 17.77.060.D.5 – *In areas designated as requiring preservation of historic, scenic or cultural attributes, proposed structures will be of a design complementary to the surrounding area.*

A detailed narrative must be prepared and submitted, along with this completed application form, that provides detailed evidence and proof that the proposal meets and complies with each criterion listed above. Each criterion must be discussed and thoroughly addressed. The narrative must also give a detailed description of the proposed conditional use.

REQUIRED SUBMITTAL ITEMS:

1. Completed Conditional Use Application form
2. Detailed written narrative
3. Completed Online Direct Pay Authorization Agreement for Credit/Debit Cards
4. Existing Conditions Plan (if applicable)
5. Site Plan
6. Landscape Plan (if applicable)
7. Building Elevations (for new construction, additions, or exterior remodels)
8. Phasing Plan (if phasing is proposed)
9. Traffic Impact Study (if required)
10. Other reports, studies, plans, or documents identified by staff as being applicable and required
11. Dock conditional use requests shall also include:
    - Detailed explanation in the written narrative describing compliance with LCMC 17.44.040.B

- Plan of the proposed dock showing location and all dock dimensions that are compliant with LCMC 17.44.040.B
- Description and/or materials cut sheets of the proposed materials of the dock that are compliant with LCMC 17.44.040.B

I (We) hereby declare under penalty of perjury under the laws of the State of Oregon that the foregoing information, as well as the information provided in the attached narrative, is true, complete, and accurate. I (We) acknowledge that providing false information in the application or any application materials shall be a violation and grounds to deny the application and void any approvals.

SIGNATURES:

Property Owner/Contract Purchaser (signature required)	Date
Daniel Wentz Digitally signed by Daniel Wentz DN: C=US, E=dwentz@lincolncity.org, O=City of Lincoln City, OU=Public Works, CN=Daniel Wentz Reason: I am the author of this document Contact Info: Dwentz@lincolncity.org Date: 2022.05.05 15:24:36-07'00'	
Applicant (signature required)	Date

- *All property owners listed on the deed of each parcel/lot must sign the application.*
- *All contract purchasers listed on the purchase contract must sign the application.*
- *If contract purchasers are individuals other than the property owners shown on the deed, all property owners listed on the deed as well as all contract purchasers listed on the purchase contract must sign the application.*

SE Oar Water Pump Station

Conditional Use Permit (CUP 2022-04)
&
Development Review Narrative (DEV REV 2022-08)

LCMC Compliance for: LCMC 17.77.060, LCMC 17.52, & LCMC 17.56

Prepared by:
Lincoln City Public Works
Public Works Capital Project Number: 19002

Lincoln City Public Works Contacts:

Stephanie Reid, PE – Public Works Director

Terry Chamberlin – Project Engineer

Daniel Wentz – Project Manager

I. Project Description:

The SE Oar water pump station project proposes construction of a new pump house building at 2010 SE Lee Ave, the existing location of the SE Lee Reservoir. This pump station will replace the aging pump station, currently at SE Oar & SE 15th St, which serves the "SE Oar Pressure Zone". Work includes: Removal of ~25 trees within development's footprint, development of a 240 square foot pump house building, new pump & public water infrastructure, underground power improvements to serve the building, and miscellaneous site improvements.

II. Existing Conditions:

The SE Oar water pump station provides water pressure to the high elevation areas off SE 19th St, SE Oar, SE Port, and SE Quay. – This is shown in the narrative Appendix 'A'. The current water "booster" pump station was constructed in 1980, at the corner of SE 15th and SE Oar Ave. This station is at the tail-end of its life; the automatic transfer frequently fails to function during power outages, the mechanical equipment requires frequent maintenance, and the pump is undersized to serve full build out of the partially-developed Delake Heights subdivision.
The current pump is located in the center of the SE 15th street right-of-way. This prevents access development for the undeveloped lots off SE 15th street and the eventual through street development to SE 19th St outlined in Lincoln City's Transportation System plan.

The proposed site for construction is 1.64 acres and zoned Multi-Unit Residential (R-M). This property is currently city owned, and the location of the SE Lee water reservoir. The SE Lee reservoir was constructed at this location in 1981 and is a covered, 2.0 million gallon reservoir. The site is currently secured by chain link fencing and additionally screened by mature vegetation around 90% of the lot perimeter. The site is bordered to the north and west by multi-unit residential development. The site is bordered to the south by another conditional use –Lincoln City's Head Start primary school. To the east is undeveloped forest land, currently outside of Lincoln City's urban growth boundary (UGB).

III. Code Compliance:

LCMC Code Compliance Narrative Index:

17.77.060: Conditional Use Permit

17.20: Multi-Unit Residential (R-M) Zone

17.55: Landscaping Standards

17.52: Supplementary Regulations & Exceptions

17.56: Off-Street Parking & Loading

17.74: Design Standards

LCMC 17.77.060 Conditional use permit.

A. Purpose. In all zones, conditional uses listed in that zone may be permitted subject to the granting of a conditional use permit. Because of their unusual characteristics, or the special characteristics of the area in which they are to be located, conditional uses require special consideration so that they may be properly located with respect to the objectives of this title and their effect on surrounding properties.

B. Procedure. Conditional use permit requests are subject to the Type III procedure, as described in LCMC 17.76.050.

C. Submittal Requirements.

1. Type III application submittal requirements are set forth in LCMC 17.76.050. Specific submittal requirements are provided on application forms and checklists as authorized in LCMC 17.76.110.

2. At a minimum, an application for a conditional use shall include the following:

a. An application form signed by the applicant and every current property owner of record as shown on the most current recorded deed;

b. Full payment of the application fee, based on the fee schedule in effect on the date of submittal;

c. Existing conditions plan;

d. Site plan;

e. Landscape plan;

f. Building elevations (for new construction);

g. Phasing plan (if phasing is proposed);

h. Traffic impact study pursuant to LCMC 17.52.300; and

i. Narrative addressing compliance with each approval criterion and applicable standard.

D. Approval Criteria. In order to grant any conditional use, the planning commission must find, based upon evidence, both factual and supportive, provided by the applicant, that:

1. The proposal is in compliance with the comprehensive plan;

2. The site for the proposed use is adequate in size and shape to accommodate the use and all required setbacks, common spaces, retaining walls, parking and loading areas, landscaping, and other features required by this title;

3. The site for the proposed use relates to streets and highways adequate in width and degree of improvement to handle the quantity and kind of vehicular traffic that would be generated by the proposed use;

4. The proposed use will have minimal adverse impact upon adjoining properties and the improvements thereon. In making this determination, the review authority shall consider, but not be limited to, the proposed location of the improvements on the site, vehicular egress/ingress and internal circulation, pedestrian access, setbacks, height and mass of buildings, retaining walls, fences, landscaping, screening, exterior lighting, and signage;

5. In areas designated as requiring preservation of historic, scenic or cultural attributes, proposed structures will be of a design complementary to the surrounding area.

E. Conditions of Approval. Pursuant to LCMC 17.76.120, the planning commission may impose, in addition to regulations and standards expressly specified in this title, other conditions found necessary to protect the best interests of the surrounding properties or neighborhood, or the city as a whole. These conditions may include, but not be limited to, the following:

1. Increasing required lot size, setbacks, common open spaces, or screening and buffering areas;

2. Requiring fences, screening walls, landscaping, or screening/buffering where necessary to reduce noise and glare from the use and maintain the property in a character in keeping with the surrounding area;

3. Requiring landscaping and maintenance thereof;

4. Increasing street widths and/or controlling the location and number of vehicular access points to the property for ingress/egress;

5. Requiring means of pedestrian/bicycle pathways to serve the property;

6. Increasing the number of off-street parking and loading spaces required; surfacing and proper drainage of parking area;

7. Limiting size, location, and number of signs;

8. Limiting the location, coverage, or height of buildings because of obstruction to view and reduction of light and air to adjacent properties;

9. Limiting or prohibiting openings in sides of buildings or structures;

10. Enclosure of outdoor storage areas and limitation of outside displays and/or storage of merchandise;

11. Requiring maintenance of grounds;

12. Regulation of noise, vibration, odors, etc.;

13. Regulation of time for certain activities;

14. Establishing a time period within which the proposed use shall be developed;

15. The requirement of a bond for removal of such use within a specified period of time;

16. Increase the size, type, or capacity of any or all utility services, facilities, or appurtenances;

17. Requirements under which any future enlargement or alteration of the use shall be reviewed by the review authority and new conditions imposed;

18. Requirements for providing the city a performance bond with a contractual agreement to assure its share of the development of streets, curbs, gutters, sidewalks, water, sanitary sewers, storm sewers, or other necessary and essential public improvements to city standards; and/or

19. Any such other conditions that will make possible the development of the city in an orderly and efficient manner and inconformity with the intent and purposes set forth in this title and the comprehensive plan.

The application is being submitted as a Type III procedure.
The application includes all the information listed in LCMC 17.77.060[C].
The application meets the approval criteria outlined in subsection [D] as follows:
Lincoln City's Comprehensive plan references the Water & Sewer Master Plan. The pump station upgrade project is in line with the objectives of Lincoln City's water master plan.
The site is of adequate size for the proposed expansion.
The proposed use will generate little to no additional traffic, with the exception of required pump station maintenance. The existing roadway is fully improved to handle existing & additional traffic.
The proposed use is in kind with the existing use & will have minimal adverse impact on neighboring properties.
The area is not identified for historic preservation.

The application meets the intent of subsection [E] as follows:

1. The proposed building meets setback & screening requirements, as applicable under additional security requirements applied to low & medium security areas by the Department of Homeland Security.

2. The site will be full secured with fencing & building walls. Mechanical equipment sound will be buffered by proposed building construction.
3. Requiring landscaping and maintenance thereof;
4. The proposed development utilizes the existing roadway access. The roadway is fully improved and of adequate width.
5. Pedestrian access has been provided to the building as appropriate.
6. No off-street parking is required for the proposed use. Maintenance vehicle access has been provided to the building utilizing the existing driveway access.
7. No signs are proposed.
8. The site change minimally increases building coverage of the site & proposes only a single story building
9. No right of way facing portion of the building has excessive openings.
10. All outdoor areas of the site will be enclosed by fencing, including outdoor storage.
11. Regular maintenance of grounds will be provided by Lincoln City Public Works
12. All noise & equipment installed on-site will be dampened by building construction.
13. Regular maintenance shall take place within working hours. Emergency maintenance shall be completed as needed.
14 & 15. The proposed development is proposed within the 2022-2023 Lincoln City Fiscal year.
16 & 17. Water & power utility capacity will be increased to serve the development & surrounding neighborhood.
18. All improvements required under typical site development (17.52.230) are completed on SE Lee Ave

17.20: Multi-Unit Residential (R-M) Zone

17.20.010 Purpose.

The multiple-unit residential (R-M) zone allows and encourages higher-density residential uses that blend a range of housing types with the surrounding neighborhood, in a compact, aesthetic, and walkable development pattern. (Ord. 2020-10 § 1)

17.20.040 Conditional uses.

A. Assisted living facilities;

B. Community meeting buildings or fraternal and social organizations;

C. Educational institutions;

D. Government buildings;

E. Places of worship;

F. Primary, elementary, junior high or high schools; nursery schools; kindergartens;

G. Radio and television transmitters or towers;

H. Recreation centers, public parks, playgrounds, and similar public-owned recreational areas;

I. Wireless communications facilities. (Ord. 2020-10 § 1)

The proposed development falls within a conditional use of the zone. A type II application is being submitted for conditional use approval per the Lincoln City Municipal Code

17.20.050 Development standards.

Development Standards - Residential Multifamily		Conditional uses
Min. lot width		Not applicable
Min. lot area (square feet)		None
Min. density		Not applicable
Max. building height (see also LCMC 17.52.190 and 17.52.200)		
a.	Primary buildings	35 feet
b.	Accessory buildings, structures, uses	25 feet
Min. building setbacks (except garage/carport entrances)[4]		
a.	Front porch	5 feet
b.	Front wall	10 feet

c.	Side interior	10 feet
d.	Side street	10 feet
e.	Rear	15 feet
Min. setbacks for garage/carport entrances (attached or detached)		
a.	Front-loaded access	Not permitted
b.	Side-loaded access	Not permitted
c.	Rear-loaded access	3-foot minimum from rear property line
Max. building coverage		45%
Common area		None required
Vehicle storage space		None required

The above requirements are met by the proposed development.

Standards 17.20.060 through 17.20.100 shall be met and are addresses in the applicable code narrative sections.
No signs are proposed for the development.

17.20.110 Restrictions.

No development shall occur in the R-M zone unless all city services (sewer and water) are available to serve such development. (Ord. 2020-10 § 1)

All city services are present.

17.20.120 Conflicts.

If conflicts occur between the requirements of this chapter and any other rules or regulations, the strictest requirement shall apply. (Ord. 2020-10 § 1)

Acknowledged

LCMC 17.55 – LANDSCAPING STANDARDS

17.55.010 Purpose.

The goals of landscaping are to increase aesthetic value; provide environmental benefits, such as controlling erosion and functioning as part of the natural hydrologic cycle; provide an attractive natural balance to built areas; reduce runoff; screen or buffer uses; and to frame or complement views. The purpose of this chapter is to provide for the design, selection, installation, and maintenance of landscaping that will satisfy the aforementioned goals. This chapter also seeks to provide for selection of plant materials that will provide long-term growth, a balance of year-round coverage and greenery, and a variety of species for a healthier, drought-tolerant, disease-resistant plant inventory. (Ord. 2020-13 § 25)

The SE Lee Water Pump Station project works to preserve existing, mature landscaping around the perimeter of the site, restore groundcover where necessary to stabilize proposed slopes, landscape drainage areas to provide some water quality to site drainage, and allow for the required views into the site for security requirements. This meets the intent of the above code section & the additional requirements of other agencies.

17.55.020 Applicability.

The standards of this chapter shall apply to:

A. All Type II and Type III procedures.

B. New construction.

C. Previously developed sites whenever improved by 50 percent or more of the assessed value of the existing improvements. (Ord. 2020-13 § 25)

A Type III application is being submitted for conditional use of the proposed project, however the proposed development does not exceed 50% of the value of existing improvements. – The landscaping standards have been addressed below in addition to other considerations & requirements put forward for the security of Low to Medium Security sites as determined by the Department of Homeland Security (DHS)

17.55.030 Landscaping requirements for detached single-unit dwellings, attached single-unit dwellings, manufactured dwellings, and duplexes.

The development is not a single family or duplex development. – None of the below sections apply and have been omitted.

17.55.040 Landscaping requirements for all development other than detached single-unit dwellings, attached single-unit dwellings, manufactured dwellings, and duplexes.

A. Landscaping is required on all portions of the site not covered by buildings, structures, or impervious surfaces.

Existing Landscaping is present across all portions of the site not covered by building, structures or impervious surfaces. Restoration will additional meet landscaping requirements for any area disturbed as part of construction.

B. Fifteen percent of the total gross area of the site shall be landscaped with live vegetation according to the standards contained within this chapter. Existing plants and trees that are healthy and noninvasive count towards the 15 percent live vegetation requirement, provided they will be protected during development adequately enough to ensure future preservation.

The total site area of the reservoir site is 70,880 square feet. Of this area: 4,550 square feet is existing or proposed impervious surface area from buildings or impervious paving. The remaining 66,330 square feet is native, mature vegetation noted for preservation or area noted for landscape restoration.

This constitutes 93.5% of the site and exceeds the 15% requirement.

1. At a minimum, the site shall contain three distinct and separate landscape areas, containing an overall total of the following spaced and/or grouped according to best planting practices and aesthetics:

Landscaping is present as a buffer along the north property line (zone 1), present as a buffer along the south property line (zone 2), and present as a large buffer/natural area along eastern third of the lot (zone 3)

a. One tree per 20 feet of total lot perimeter; and

b. One shrub per 10 feet of total lot perimeter; and

c. Living ground cover.

The landscaping standards for the site require 56 trees (*1,111 feet of lot perimeter / 20 feet per tree)*, 112 shrubs (1,111 feet of lot perimeter / 10 feet per shrub) and 10% site coverage with living groundcover (7,088 square feet).

The north, south, and east perimeter of the site are covered in substantial native vegetation. Over 75 mature trees were counted within the surveyed project area; Street view photography additionally indicates a comparable number of shrubs & native ground cover filling in the area beneath these trees.

~30 trees are noted for removal for accommodation of the building placement but the majority of the site, outside of the immediate building footprint, is noted for the native vegetation to be preserved. Additionally, the eastern 135' of site (~27,000 square feet) is heavily forested & noted for preservation.

The preserved ~45 trees, existing shrubs & ground cover along the north, west & south boundary of the site contribute to the required 56 trees, 112 shrubs, and living ground cover requirements. The 27,000 square feet of preserved native forest easily meets the additional landscaping and planting requirements

2. If islands are required in parking areas, each island must contain at least one tree, sized appropriately for the area of the island. The remainder of the island must be covered with shrubs and/or living or nonliving ground cover, subject to the standards set out in subsection (C) of this section and LCMC 17.55.050. Islands count towards both the parking landscaping requirement and the 15-percent landscaping requirement.

No parking areas are required or planned on the proposed plans.

C. Ground Cover and Mulch.

1. Ground cover used as mulch between plantings shall be placed at a minimum two- to three-inch-thick layer to ensure effective erosion control and to avoid leaching of excessive nutrients.

2. Acceptable mulch materials are straw, well-aged compost and leaves, wood mulch or bark dust, or wood nuggets that are a minimum diameter of one inch. Mulching with manure that has not been composted or aged is prohibited.

3. Nonliving ground cover materials such as noncompacted pea gravel, river rock, pumice, stones, boulders, bark dust, and cedar chips are acceptable ground cover.

4. Standards for living ground cover are those set out in LCMC 17.55.050. (Ord. 2020-13 § 25)

All area not covered by building, or impervious area is noted for seeding to cover bare soils. Any miscellaneous area not seeding will be covered with a landscaping material noted above.

17.55.050 Selection, preparation, and installation for all landscaping.

A. Selection of Materials.

1. Invasive and noxious plants as defined in LCMC 8.12.010 or by the Oregon Department of Agriculture are prohibited.

2. Hydro-seeding is prohibited.

3. All selections must be healthy and disease-free at the time of planting.

4. Sizes of Plantings.

a. Deciduous trees must be a minimum of one and one-half caliper inches at the time of planting.

b. Conifer trees must be a minimum of five feet in height at the time of planting.

c. Ground cover plants must be at least four-inch pot size.

d. Shrubs must be at least three-gallon size at the time of planting, unless three-gallon sizes are not available for purchase at the time of planting for the particular shrub selected. In those instances, one- or two-gallon size is allowed.

e. Plantings at their mature height shall not be higher than five feet if they would block the view of any shoreline of the Pacific Ocean, Siletz Bay or Devils Lake.

f. All plantings must be one, or a combination of, the following: native to the Pacific Northwest; selected from the City of Lincoln City Guide to Landscape Selections; or suitable for the site conditions as certified by a written and signed statement from a landscape architect licensed in the state of Oregon or a landscape nursery person.

The majority of landscaping requirements are met by preservation of existing, native landscaping.
No invasive or noxious species noted for installation
All seeding for project restoration shall be completed by hand.
Landscape restoration is noted within the project's contract bid tab.

B. Preparation.

1. All newly landscaped areas must be cleared of invasive and noxious plants as defined in LCMC 8.12.010 and by the Oregon Department of Agriculture prior to installation of new landscaping.

2. All newly landscaped areas must be cleared of dead, dying, or diseased vegetation prior to installation of new landscaping.

Plans for the new project area include preparation to meet the above requirements.

C. Installation.

1. Plant materials must be installed to current nursery industry standards.

2. Plant materials must be properly supported to ensure survival. Support devices such as guy wires or stakes must not interfere with vehicular or pedestrian movement.

3. All landscaping shall be installed prior to issuance of a certificate of occupancy or:

a. Agreement to Delay Installation. If all landscaping has not been satisfactorily completed prior to requesting issuance of a certificate of occupancy and the director

determines that a delay in completion of the landscaping is appropriate because there has not been a reasonable amount of time for the completion of the landscaping or for other reasons, then the director may require, as a condition of such issuance or use, a landscaping agreement signed by the owner, in a form satisfactory to the director. A landscaping agreement shall:

i. Identify all landscaping to be completed and establish a time period, not to exceed 120 days, within which the owner shall complete the landscaping;

ii. If the identified landscaping is not completed within the established time period, then this shall be considered a Class B violation with a fine of up to $1,000 per day for each day the identified landscaping remains incomplete. (Ord. 2020-13 § 25)

The majority of landscaping requirements are met by preservation of existing, mature landscaping. Any additional planting completed will meet the above requirements.

17.55.060 Irrigation and maintenance.

A. Irrigation. The intent is to ensure that plants will survive the critical establishment period when they are most vulnerable due to lack of watering. Irrigation systems shall be provided for all planted areas for a period of at least two years, or until it is demonstrated that new plants have become naturalized.

All landscaping is mature, native vegetation. Irrigation is not required.

B. Continuous maintenance of property includes, but is not limited to, weeding, pruning, removing and eradicating invasive and noxious plants, removing diseased or dead vegetation and replacing with healthy specimens, and removing litter, trash, and debris. Failure to maintain property in accordance with this chapter shall be considered a Class B violation. (Ord. 2020-13 § 25)

Requirements are met by regular site maintenance by city crews, which shall continue and include the proposed improvements

17.55.070 Clear-vision requirements.

Landscaping shall be in conformance with the clear-vision area requirements set out in LCMC 17.52.060. (Ord. 2020-13 § 25)

No new landscaping impacts the clear vision triangle as defined within LCMC 17.52.060

17.55.080 Living landscaping as screening.

A. When screening is required, the applicant may choose to use vegetation as the screening method. If so, the following standards must be met:

1. Screening shall be in the form of a hedge.

2. The hedge shall consist of evergreen shrubs and shall be native to the Pacific Northwest and suitable for the site conditions as certified by a nursery person or a landscape architect licensed in the state of Oregon or selected from the City of Lincoln City Guide to Landscape Selections.

3. Selected shrubs must have a mature height of at least six feet.

4. Shrubs must be of sufficient size and number to provide solid sight obstruction, at a minimum of six feet in height, at the time of planting. (Ord. 2020-13 § 25)

Screening is provided as applicable by preservation of existing landscaping along the north, east, and southern boundaries. Screening from the public right-of-way to the west conflicts with security requirements put forward by the Department of Homeland Security (DHS). Fencing shall secure the site but allow for required line of sight into the low to medium security classified site.

LCMC 17.52 – SUPPLEMENTARY REGULATIONS AND EXCEPTIONS

17.52.010 Accessory uses – General provisions.

Accessory uses shall comply with all requirements for the principal use except where specifically modified by this title, and shall comply with the following limitations:

A. *Repealed by Ord. 2010-04.*

B. A greenhouse or hothouse may be maintained accessory to a dwelling, provided the activity does not exceed that which requires a license under ORS Chapter 571, Nurseries and Nurserymen.

C. A guest house may be maintained accessory to a dwelling, provided there are no portable, temporary, or permanent cooking facilities in the guest house.

D. *Repealed by Ord. 2010-04.*

E. A home occupation shall not occupy more than one-quarter of the ground floor area of the dwelling. The residential character of the building shall be maintained and the activity shall not have the outward appearance of a business nor detract from the residential character of the neighborhood. There shall be no outside display or storage of merchandise, materials, signs or equipment on the premises. Noise, odor, smoke, gases, fallout, vibration, heat or glare resulting from the home occupation shall not be detectable beyond the limits of the property. (Ord. 2020-15 § 6; Ord. 2010-04 §§ 1, 2; Ord. 84-2 § 4.010)

The above requirement does not apply.

17.52.030 Access requirement.

Every lot shall abut a street, other than an alley, for at least 25 feet. (Ord. 84-2 § 4.030)

This requirement is met.

17.52.050 Storage in front setback area.

Boats, RVs, trailers and house trailers shall not be stored in a required front setback area. (Ord. 2020-15 § 8; Ord. 84-2 § 4.050)

This requirement is met.

17.52.060 Clear-vision area requirement.

A. Requirement to Provide Clear Vision. For public safety purposes, all properties shall have triangular clear-vision areas (aka clear-vision triangles) where streets (public or private) intersect with other streets, commercial alleys and commercial driveways. Clear-vision triangles shall also be provided for street intersections with commercial driveways as provided herein. Clear-vision areas at local intersections shall meet the requirements in this section, which are meant to be adequate to allow drivers and pedestrians who are stopped or approaching with caution to see intersecting traffic

in time to avoid collisions. Clear-vision areas at intersections with Highway 101 must meet with Oregon Department of Transportation approval and comply with the requirements of this section.

B. Definition of a Clear-Vision Triangle. This section defines a clear-vision triangle differently for (1) controlled intersections, where at least one street has a stop sign or traffic control light; (2) for uncontrolled intersections; and (3) in commercial zones, for alleys and driveways. The definitions for clear-vision triangles at the intersections of two streets use “Point A,” which is the point of intersection of the lot lines (the property corner), or in the case of a curved lot line, the intersection of the tangents of the endpoints of the curve (Figure 17.52.060-1).

C. Clear-Vision Requirements. Clear-vision triangles shall be free of obstructions (including but not limited to plantings, fencing, or other temporary or permanent obstruction) from two-and-one-half feet to eight feet above the grade of the street, except for obstructions specified in subsection (D) of this section.

D. Exceptions. The following obstructions to clear vision may be within the clear-vision areas required by this section, unless the obstruction is identified by the city engineer and planning director as creating an unacceptable hazard:

1. Trees existing in the location prior to May 28, 2014, if limbed to at least eight feet. Trees in the clear-vision area may not be replaced.

2. Topographical features (e.g., inclines, retaining walls) existing as of May 28, 2014, or, for newer development, as determined by the city engineer and planning director as necessary or unavoidable.

3. Principal buildings, accessory buildings, and structures existing as of April 24, 2014. Notwithstanding the above, a legally nonconforming principal building is not subject to removal based on the hazard exception.

4. Fences Existing as of May 28, 2014. New fences that are at least 75 percent open (e.g., wire or chain link) may be within clear-vision triangles.

5. Existing driveways and existing required parking spaces may be in the clear-vision area. New required parking spaces shall be outside the clear-vision triangle. New driveways should be outside the clear-vision areas. New garages to be accessed by driveways that cross over clear-vision areas must be set back at least 20 feet from the clear-vision area.

6. Utilities existing as of May 28, 2014.

7. Public traffic signs. (Ord. 2014-05 § 1; Ord. 84-2 § 4.060)

No public streets or commercial driveways create a clear vision area impacted by the new building. The existing driveway to the site is used solely for access to the site for pump & site maintenance; the clear vision triangle does not apply.

17.52.080 Maintenance of minimum requirements.

No lot area, minimum setback area, open space, or off-street parking or loading area existing on or after the effective date of the ordinance codified in this title shall be reduced below the minimum required for it by this title. (Ord. 2020-15 § 9; Ord. 84-2 § 4.080)

Acknowledged

17.52.100 Landscaping.

A. Purpose. Landscaping is important to the community for its aesthetic value and environmental benefits, such as controlling erosion and functioning as part of the natural hydrologic cycle. By requiring landscaping for all new development and substantial improvements, the aim of this section is to maximize both benefits. Landscaping for each new development shall satisfy the following requirements.

B. Applicability. Landscaping requirements in this section apply to:

1. Newly developed lots.

2. Previously developed lots whenever improved by 50 percent or more of the assessed value of the existing improvements.

The above & subsequent code sections do not apply to the proposed development according to 17.52.100[B] Applicable landscaping standards have been met in accordance with 17.55 and addressed in the referenced code narrative section.

17.52.120 Utilities.

A. In the single-family residential (R-1) zone, and the multiple-unit residential (R-M) zone, when city services are not available or when only partial services are available, the minimum parcel size shall be five acres; except, however, any existing lots of record less than five acres in area which do not front on a public sewer line but which will be connected to a public water line may be developed with a single-family dwelling utilizing an approved subsurface sewerage disposal system, provided a deferred improvement agreement is executed and recorded by the owner of record consenting to the establishment of a local improvement district to participate in future public sewer system extensions and connections.

B. In all zones, all electrical, telephone and cable television utility service installations or connections made as part of new construction of a building or structure shall be placed underground in accordance with city standards. (Ord. 2020-15 § 11; Ord. 95-15 § 11; Ord. 91-1 § 1; Ord. 84-2 § 4.120)

All city utilities are present to the site.

17.52.150 Exterior lighting.

Artificial exterior lighting shall not be designed to shine or create glares in any residential zone or residential use, adjacent dwelling unit or in a public right-of-way.

A. Light poles must not exceed a height of 20 feet.

B. All lighting must be shielded to avoid glare, light pollution (night sky), and light spillover onto residential properties. Shielding must be integral to the light fixture and direct light downward.

C. Luminance at the property line, or no more than five feet over the property line, must be zero.

D. Maximum initial luminance of outdoor sales displays, outdoor storage areas, service station canopies, and similar areas must not exceed 20 foot-candles.

E. Maximum initial luminance of parking lots must not exceed four foot-candles.

F. Up-lighting is prohibited. The maximum illumination limits for wall washing are one foot-candle for dark colored surfaces and one-half foot-candle for light colored surfaces.

G. Pedestrian ways and building entrances not otherwise illuminated by building-mounted lights or streetlights must provide between one and two foot-candles of light from bollards, step lights, or other low-profile fixtures that are appropriate for walkways and plazas.

H. The manufacturer's data or measurement must demonstrate conformance with this section. Cut sheets, a photometric plan analysis, and an exterior lighting plan showing the locations, types, sizes, and heights of all exterior lighting fixtures shall be included with the applicable application submittal.

Exterior lighting shall be provided as required outside of pedestrian entrances in accordance with Oregon Building Code requirements. All lighting shall be LED lighting and comply with the luminance & down-lighting requirements outlined in LCMC 17.52.150[A] through [H]

17.52.160 Required setbacks – Exceptions.

A. Architectural Features. Architectural features such as cornices, eaves, canopies, sunshades, gutters, chimneys, flues, awnings, and bay windows not more than four feet wide or high may project up to 18 inches into a required setback area.

The above requirement is met.

B. Accessory Structures. A required side or rear setback may be reduced to three feet for an accessory structure, provided the structure is detached from other structures by five feet or more and does not exceed a height of one story nor an area of 200 square feet.

The above requirement does not apply.

C. Fences. Fences, which may be located within required setback areas up to the property line, may not exceed three and one-half feet from the grade of the street centerline in the required front setback area, and shall not exceed six feet in other setback areas nor conflict with requirements of a clear vision area as provided in LCMC 17.52.060 or the clear vision areas of adjacent private driveways.

The above requirement is met.

D. Retaining Walls. Retaining walls may be constructed in required setback areas, subject to the following limitations:

1. One or more retaining walls, none of which individually exceeds four feet in height, may be used, provided each successive wall is set back or stepped from the next lowest wall at least one foot for each one foot of height for that wall;

2. Within side and rear building setbacks that are not adjacent to a street or right-of-way, the height of a retaining wall exposed toward the interior of the property may be allowed that is up to eight feet in height. Those exposed toward the exterior of the property shall be limited as in subsection (D)(1) of this section.

The above requirement does not apply.

E. Disabled Access Facilities. Disabled access facilities may be constructed in required setback areas as additions to existing buildings if exclusive of railings they do not exceed the height of the building's ground floor and do not conflict with the clear vision requirements of LCMC 17.52.060. For purposes of this section disabled access facilities include ramps, sidewalks, curbing and entrances constructed for the purpose of making a building accessible to a disabled person. Disabled access facilities must be constructed in accordance with any applicable requirements of the building code in effect at the time of their construction. Disabled access facilities constructed as additions to a nonconforming structure shall not be considered an alteration or extension of the nonconforming structure.

The above requirement is met.

F. Bridges. Unenclosed and uncovered pedestrian or vehicular bridges for access to a dwelling may be constructed in a required setback area. Such bridges may not have a slope up from the adjacent roadway exceeding the maximum allowed for driveways.

The above requirement does not apply.

G. Porches, Decks, and Stairs. Unenclosed and uncovered porches, decks, and stairs may be constructed in a required setback area, provided no part of the porch, deck, or stairs is more than 30 inches above the ground or otherwise requires a building permit. (Ord. 2020-15 § 12; Ord. 2016-08 § 1; Ord. 2010-04 § 4)

The above requirement does not apply.

17.52.170 Solid waste, garbage, trash, recycling, and composting receptacle storage areas.

All solid waste, garbage, trash, recycling, and composting receptacles shall be located within a building or within an enclosure that is at least 20 feet or more from any pedestrian space which screens the receptacle from the view of neighboring property, pedestrian space, or from right-of-way,

except those receptacles associated with a detached single-unit dwelling, attached single-unit dwelling, duplex, or manufactured dwelling. (Ord. 2020-13 § 26; Ord. 84-2 § 4.170)

17.52.180 Placement and screening of mechanical equipment.

A. Any heating, air conditioning, or other mechanical equipment installed on or near a building to be used to serve the building or a function performed therein, and any propane tanks, shall be screened from the ground level view from adjacent properties, pedestrian spaces, and from public right-of-way, and shall not be located within 20 feet of pedestrian space.

Screening shall be provided, from the right of way, for mechanical equipment noted on the south side of the building, in the form of landscape shrubs. Shrubs shall be planted outside of the fence. Screening from the south shall be provided by grading & existing vegetation.

B. Rooftop mechanical units shall not be visible from any public right-of-way and shall not exceed the allowable building height.

The above requirement does not apply.

C. Ground-mounted mechanical units shall be limited to the sides or rears of buildings and screened from view from adjacent properties and from public right-of-way.

Screening shall be provided, from the right of way, for mechanical equipment noted on the south side of the building. Screening shall be provided in the form of landscaping within the 10 foot setback area outside of the noted fence. Landscape screening shall be provided in accordance with LCMC 17.55.080, Living Landscaping as Screening. Tentative plantings are "Thuja Green Giant Shrub" or "Pacific Wax Myrtle" plantings.

Screening from the south shall be provided by grading & existing vegetation.

D. Standpipes, meters, vaults, and similar equipment shall not be placed on a front elevation when other alternative locations exist. (Ord. 2020-13 § 27; Ord. 98-11 § 4; Ord. 84-2 § 4.180)

The above requirement has been met.

17.52.190 Building height limitations.

A. No structure used for human habitation that exceeds 45 feet in height shall be permitted in any zone unless consent is first approved by the voters of the city at a regular or special election. For the purpose of this section, "height" means the average vertical distance from the grade at the center of all walls of the building to the highest point of the roof, excluding those excepted in LCMC 17.52.200.

B. No structure that exceeds 35 feet in height shall be permitted in a residential zone within 500 feet of any shoreline without prior approval as a Type III procedure.

C. No structures used for human occupancy shall be permitted to exceed the building height limitations of the zones in which they are located. To ensure that this standard is met the following rules apply:

1. Building permit applications must include elevations of all exterior walls of the proposed structure showing:

a. The line of the approved grade in the plane of the wall; and

b. The highest part of the structure.

2. The grade may not rely on retaining walls, riprap, other artificial restraints, or berming to increase elevation at the point of height measurement.

3. For the purposes of this subsection, “approved grade” means:

a. The existing grade, meaning one of the following:

i. The ground level before any human disturbance as shown by survey or other reliable evidence; or

ii. The ground level shown on the city’s 2009 LIDAR data (which is available from the planning and community development department); or

iii. If the proposed building site has existing structures or other disturbances to the land that existed lawfully prior to October 1, 2010, the ground level established when the structure or disturbance was created (which may be determined by any of the above means); or

iv. If there has been grading on the proposed building site, without a grading permit, the planning and community development director, in consultation with the city engineer, will determine the existing grade.

b. The grade shown on a grading plan approved as a part of one of the following:

i. A final master plan for a planned unit development under LCMC 17.77.120; or

ii. A partition or subdivision under Chapter 16.08 LCMC; or

iii. A development review under LCMC 17.77.070; or

iv. A conditional use permit under LCMC 17.77.060; or

v. A grading plan under Chapter 12.08 LCMC; or

vi. A building permit for a structure not subject to any of approvals in subsections (C)(3)(b)(i) through (v) of this section. (Ord. 2020-15 § 13; Ord. 2010-04 § 5; Ord. 84-2 § 4.190)

The noted building height is 16' 11" from finished grade. Finished grade is proposed as below the existing grade on-site. The above requirements are met.

17.52.200 Building height limitations – General exception.

Projections such as chimneys, spires, domes, elevator shaft housing, towers, aerials, flagpoles, and other similar objects not used for human occupancy are not subject to the building height restrictions of this title. (Ord. 2010-04 § 6; Ord. 84-2 § 4.200)

The noted building height is 16' 11" from finished grade. Finished grade is proposed as below the existing grade on-site. The above requirements are met.

17.52.220 Tree protection and removal. (Code section hyperlinked for brevity)

A tree removal permit shall be submitted with permit application per 17.52.220[F][1]][b][vi]. Permit conditions and requirements under subsection [F][2] through [F][8] shall be adhered to. All removal shall take place in accordance with subsection [F][9]

No removal of trees shall occur >100' from the proposed building development.

A topographic survey, including tree survey, has been submitted with development application material. The plan notes existing trees, proposed removal, and preservation, location, size, and species of protected trees as required within subsection [I]
Trees for removal are clearly marked on the plans & shall be identified on-site prior to construction with tree protection fencing.

17.52.230 Public infrastructure improvement requirements. (Code section hyperlinked for brevity)

The submitted site plan shows all features identified in LCMC 17.52.230 subsection [A][1].

The subject site is on a fully improved roadway (sidewalk, curb, & paved roadway). The existing driveway apron does not meet ADA standards and is planned for reconstruction.

Drainage accommodations are being made at the back of sidewalk to direct site drainage into the city storm system. – This includes a grass lined drainage swale for conveyance & water quality function.

Water & sewer services are existing to the site. Additional connections are being completed to connect the proposed infrastructure upgrades to the existing system.

Underground power utilities are being extended to serve the development per the submitted plans. No existing overhead utilities exist to the site.

17.52.250 Standards for manufactured homes.

The development is not a manufactured home; the subsequent code section does not apply

17.52.260 Standards for attached single-family dwellings development.

The development is not a single-family dwelling; the subsequent code section does not apply

17.52.300 Traffic impact study (TIS) requirements.

A. Purpose. The purpose of traffic impact study (TIS) requirements is to implement Sections 660-012-0045(2)(b) and (e) of the Oregon Transportation Planning Rule that require the city to adopt standards and a process to protect the future operations of roadways and transit corridors. This section establishes when a land use application requires a TIS and the city's criteria for approval. This section establishes the TIS as a basis for requiring improvements to minimize impacts to transportation facilities and ensure adequate facilities for both motorized and nonmotorized modes of transportation, access, and circulation. The city will coordinate its traffic impact study requirements with ODOT, so that an applicant need complete only one such study to comply with the requirements of both agencies.

B. Applicability. A TIS shall accompany a land use application at the request of the city engineer, if the proposal involves one or more of the following:

1. An amendment to the Lincoln City comprehensive plan or zoning map;

2. A new direct property approach road to US 101;

3. Likely generation of 50 or more p.m. peak-hour trips on US 101, or 100 or more p.m. peak-hour trips on the local transportation system, according to the Institute of Transportation Engineers (ITE) Trip Generation Manual;

4. If use on any street or direct property approach road intersecting with US 101 increases by 10 vehicles or more per day that exceed 20,000 pounds gross vehicle weight;

5. An existing or proposed access driveway that does not meet minimum spacing or sight distance requirements, or a driveway located where vehicles entering or leaving the property are restricted, or such vehicles are likely to queue or hesitate at an approach or access connection, thereby creating a safety hazard; or

6. A change in internal traffic patterns that may cause safety problems, such as back-up onto the highway or traffic crashes in the approach area.

The triggers for a TIS are not met; the subsequent code sections do not apply.

LCMC 17.56 – OFF-STREET PARKING AND LOADING

17.56.010 Applicability.

The requirements of this chapter are applicable for all zoning districts, unless specifically stated otherwise, and shall be adhered to when:

A. A new building is hereafter erected; or

B. An existing building is enlarged to the extent that the cost of construction exceeds 50 percent of the improvement value of the building as shown on the Lincoln County Property Report from the Lincoln County assessor's office or to the extent that the building's capacity is increased by more than 50 percent in terms of units listed in LCMC 17.56.050; or

C. The occupancy classification of an existing building, or any portion thereof, is changed and the building enlarged; parking spaces shall be provided in proportion to the increase only, provided the increase is less than 50 percent of the existing building area. If the increase exceeds 50 percent, parking shall be provided for the entire structure in accordance with the requirements of this chapter. If the structure in which the change of use is to occur is not enlarged, no additional parking shall be required. (Ord. 2020-13 § 24)

The proposed development utilizes the existing vehicle access to 2010 SE Lee Ave and no parking requirements have been noted within the proposed use under Table 17.56.030-1. Of the off-street parking & loading standards. Additional parking has been provided for vehicle maintenance access to the north portion of the building. This includes 1 compact spot and 1 standard parking space. The remainder of the off-street parking & loading standards do not apply.

Regular maintenance of grounds & building vehicle access will still be provided by city crews during regular pump maintenance. Substantial mature landscaping is being provided across the site. Parking areas are proposed in Portland Concrete Cement per LCMC surfacing requirements, with surface drainage routed to landscaping onsite.

LCMC 17.74 – Design Standards

17.74.010 Intent.

The intent of these regulations is to:

A. Enhance and protect the city's quality of life and community image through clearly articulated site and building design standards;

B. Protect and promote the city's economic vitality by encouraging and rewarding high-quality development;

C. Establish a clear relationship between streets, pedestrian spaces, and buildings; and

D. Enhance and protect the security and health, safety, and welfare of the public. (Ord. 2020-10 § 14)

The intent of the Design Standards (LCMC 17.74) have been met to the extent which they apply to the proposed project.

17.74.020 Applicability.

A. Zoning Districts. The provisions of this chapter apply to the multiple-unit residential (R-M), recreation commercial (RC), general commercial (GC), Nelscott plan district (NP), Taft Village core (TVC), and Oceanlake plan district (OP) zones as follows:

1. Article I, General Provisions.

2. Article II, Design Regulations for Mixed Uses and Uses Other Than Residential.

3. Article III, Design Regulations for Multi-Unit Structures and Developments.

B. Conflicting Regulations. Where conflicts occur between this chapter and other municipal code regulations or ordinances, the strictest requirement shall apply.

C. The provisions of this chapter apply to the development of undeveloped sites, the redevelopment of previously developed sites, and/or new construction of any building or structure. (Ord. 2020-10 § 14)

The subject site is zoned Multiple-Unit Residential (R-M). The existing site is developed as a water reservoir, to which a new, water pump station building, is being added. The below applicable code sections have been addressed to the extent which the intent applies to the subject project.

17.74.030 Exceptions and nonconformances.

A. Routine Repairs and Maintenance. Routine repairs and maintenance are exempt from these standards.

B. Additions or Expansion. Additions to or expansions of an existing building or structure are exempt from standards contained in this chapter that are specific to building design, provided the addition or expansion is less than 800 square feet of gross floor area. If the addition or expansion consists of 801 square feet or more of gross floor area, then the standards contained in this chapter that are specific to building design shall apply to the addition or expansion. Existing nonconforming portions of the building shall come into conformity as provided in Chapter 17.64 LCMC. As part of the addition or expansion, and regardless of size, all other portions of the site (landscaping, off-street parking and loading, supplementary regulations and exceptions, and nonconformances, etc.) must comply with respective code requirements as applicable.

C. Residential Dwelling Exception. Detached single-unit dwellings, attached single-unit dwellings, duplexes, and manufactured dwellings in any zone are exempt from all requirements of this chapter.

D. Nonconformances. See Chapter 17.64 LCMC for application of these standards in nonconforming situations. (Ord. 2020-10 § 14)

The above code section does not apply

17.74.040 Standards versus guidelines.

A. The sections that follow provide intent statements, followed by standards and guidelines. Most standards contain approval criteria that are objective; however, some criteria require the review authority to apply discretion. Where discretion is involved, the review authority must use the guidelines in evaluating a proposal. The following further explains the relationship between intent statements, standards, and guidelines.

1. Intent statements are not utilized as applicable approval criteria for evaluating the application for approval or denial. However, intent statements are utilized when considering approval or denial of requests for adjustments or modifications as the applicant must demonstrate how the requested adjustment or modification and proposed alternative conform to the intent statements.

2. Standards use the words “shall” or “must” and are mandatory. A request for an adjustment or modification is required if the standard cannot be met.

3. Guidelines use the words “should,” “may,” “preferred,” “encouraged,” and “discouraged,” and are advisory only. Guidelines supplement the standards and provide examples of acceptable or unacceptable design.

a. Graphics used in this chapter do not prescribe a particular design, but serve as examples of acceptable or unacceptable design solutions.

4. Standards and guidelines both serve as approval criteria, but the review authority has much greater latitude in applying guidelines. Where a guideline conflicts with a standard, the standard prevails.

5. In the case of a requested adjustment or modification to a standard, the submitted application and associated materials must demonstrate how the adjustment or modification results in equal or greater conformity to the intent of the code and other applicable standards and guidelines.

6. Nullification of one standard or guideline by a court of competent jurisdiction does not cause any other standard or guideline to be nullified (severability).

B. Burden of Proof. The submitted application and associated materials must demonstrate how the proposal meets all the applicable standards contained in this chapter and other applicable city regulations. Through adjustment or modification requests, the application and associated materials must also provide evidence of why a standard is not relevant given the context of the site and proposed use.

C. Adjustments and Modifications. Adjustments to or modifications of the standards in this chapter are not variances. The procedures and criteria for variances are addressed in Chapter 17.68 LCMC. The review authority may approve requests for adjustments to or modifications of the standards in this chapter provided the applicant demonstrates the following:

1. The character types and guiding principles, as contained in LCMC 17.74.050, and the intent statement(s) under the standard to be adjusted or modified can be better met through the proposed alternative design solution; or

2. Necessary characteristics of the allowed use present practical difficulties in meeting a standard. In such cases, the submitted materials must provide alternative features to meet the intent of the standard, along with an explanation of how the alternative features meet the intent of the standard being adjusted or modified. (Ord. 2020-10 § 14)

Article II. Design Regulations for Mixed Uses and Uses Other than Residential

17.74.050 Guiding principles.

A. Enhance Lincoln City's historic qualities and facilitate compact, walkable, mixed use development.

The improvement does not impact the above guiding principle. The existing use of the site is preserved, and ADA improvements to the sidewalk frontage of the lot is being improved.

B. Orient buildings and their primary entrances to public or private streets or to pedestrian spaces abutting the public or private streets.

The building is being placed on a secure site for city infrastructure requirements. A pedestrian access has been provided on the public right-of-way side but the overall intent of the section does not apply.

C. Create vibrant pedestrian spaces that, where possible, take advantage of western and southern exposures.

No pedestrian space is appropriate on-site. Sidewalk ADA improvements do increase walkability across the frontage of the site.

D. Provide aesthetically pleasing visual interest along the public right-of-way and private streets, retaining the historic pattern of small buildings or at least the impression of small buildings.

The site proposes addition of a small building with minimal impression. The site has security requirements within the site, but plans include seeding & restoring the immediate site frontage to the SE Lee Right-of-way with living groundcover (i.e. grass). The remaining overall intent of the section does not apply.

E. Treat corner lots as focal points by prominent placement of the building and with vertical building elements, public art, seating, or other design features.

The overall intent of the above section does not apply.

F. Allow for flexibility to accommodate a wide variety of site conditions, while maintaining basic standards and common themes.

The building design matches the theme and design style of other pump station structures throughout Lincoln City.

G. Enhance the street front by providing visual interest through site design and building articulation.

The overall intent of sections E through F do not apply.

H. Sustainable building practices are encouraged, as is energy conservation in construction.

The reinforced Concrete Masonry Unit building design provides low maintenance and energy efficiency through operation required by Lincoln City's utility infrastructure buildings.

I. Permeable surfaces for driveways, walkways, and parking areas are encouraged. (Ord. 2020-10 § 14)

Minimal pervious surface is being added to the site.

17.74.060 Site design.

A. Intent.

1. Facilitate the development of a continuous pedestrian pathway network throughout the city.

2. Create a sense of enclosure and human scale by orienting buildings to streets or, where buildings must be set back from the street, by orienting them to pedestrian activity, and design intervening area with pedestrian spaces and landscaping.

3. Maintain views to the ocean, bay, rivers, and forested hillsides and bluffs.

B. General Standards.

1. Site Conditions. Locate buildings to preserve existing topography, views, and natural features to the extent possible, and to take advantage of unique site conditions.

The above code section is met.

2. Pedestrian Space. Maximize opportunities for usable, attractive, well-integrated pedestrian space.

The overall intent of the above section does not apply

3. Site Design. Site designs should maximize the preservation of existing mature vegetation and should provide for on-site storm water quality treatment and management such as through providing bioswales or other natural water treatment features.

The site design provides a grass lined swale for site drainage & preserves mature vegetation outside of the impact of the building footprint.

4. Natural Features and Systems. Prioritize natural features and systems by orienting buildings around existing native vegetation, significant wetlands, and significant riparian areas, and maximizing passive heating and solar gain, protection from weather, and predominant winds.

The site contains no significant wetlands or riparian areas. Vegetation has only been noted for removal within the building footprint and impacted area. Vegetation will be planted following construction of the building.

5. Building Entries. Create clearly identifiable building entries from the street, unless restricted by unique site conditions.

The site is intended to be secure for protection of city infrastructure. A locked, pedestrian door has still been provided with pedestrian access to the existing sidewalk.

6. Building Continuity. Where practicable, it is encouraged to extend buildings from side property line to side property line to increase vitality and to maintain continuity of a storefront character.

7. **The overall intent of the above section does not apply**

8. Mixed Use Buffers. Provide buffers at residential entries at sidewalks within mixed use frontages by means of entry courtyards, porches, or stoops as well as landscaping

The above code section conflicts with direction from the Department of Homeland Security to ensure visibility into secure public infrastructure sites. Screening has been preserved along

the north, south, & east property line via existing mature vegetation. The west property line is being partially screened by fencing & the new CMU building. Site will still be visible from the public right-of-way to ensure security requirements for Low to Medium security sites are met.

9. Retaining Walls. Where new retaining walls are constructed adjacent to public right-of-way, they must consist of one or more of the following: rusticated concrete block, striated or battered concrete, or natural stone.

   No new retaining walls are being constructed.

10. Compliance with Chapter 17.52 LCMC is required. If conflicts occur, the strictest requirement shall apply.

See narrative summary of LCMC 17.52

11. Drive-Through Facilities and Stacking Lanes. Drive-through facilities, including windows and ordering stations, must not be visible from public right-of-way. Stacking lanes must be able to accommodate all vehicles on the site, such that no part of any vehicle using or in line to use a drive-through facility shall project into or over any portion of public right-of-way.

12. The overall intent of the above section does not apply

11. Building Orientation.

a. Building Orientation. A building or structure must extend along at least 50 percent of the lot's street frontage(s). If the lot has more than one street frontage, this requirement shall apply to all of the lot's street frontages. This required 50-percent building frontage must be at the back of a public sidewalk, public right-of-way, or adjacent to an area dedicated to the public. See Figure 17.74.060-2.

b. Primary Building Entrance.

i. Corner Building. A primary entrance is required at the corner within 10 feet of right-of-way. Where a corner entrance is not practicable, a primary building entrance must be within 40 feet of the corner. See Figure 17.74.060-2.

ii. Interior Building. A primary entrance is required within 10 feet of public right-of-way and directly connected to a public sidewalk.

The overall intent of the above section does not apply

17.74.070 View protection.

A. Intent. To acknowledge existing key natural and scenic views of the Pacific Ocean, Siletz Bay, and Devils Lake, and leverage context-sensitive design to minimize impact to these views. Design solutions include changing height, bulk, setbacks, or orientation to frame or retain partial views.

View Protection requirements do not apply to the proposed development

17.74.080 Pedestrian spaces.

A. Intent.

1. The increased development intensity, mixture of uses, pedestrian activity, close building orientation, and minimal private open space envisioned for the city should be offset by providing pedestrian spaces along building frontages and breaks between buildings.

2. Pedestrian spaces serve to provide visual relief, pedestrian resting areas, and opportunities for socialization.

3. Projects must contribute their proportionate share of pedestrian space. Pedestrian spaces count toward the required minimum landscape area.

Due to proposed site use & security requirements, Pedestrian spaces are inappropriate provisions for the site design.

17.74.090 Landscaping.

Landscaping shall be provided in accordance with Chapter 17.55 LCMC. (Ord. 2020-10 § 14)

Landscaping has been provided in accordance with LCMC 17.55

17.74.100 Building design.

A. Intent. The building design standards reflect the following community values:

1. Context-sensitive and eclectic coastal architecture.

2. Articulated building facades to break up large volumes and promote human scale.

3. Contextually appropriate materials, textures, and colors.

4. Pedestrian-scale development through ground floors made active with windows, pedestrian amenities, and furnishings.

5. Corner buildings that serve as focal points with vertical building elements, furnishings, and/or public art.

6. Architecture that is consistent with the character of each pearl, balancing rhythm and continuity, yet creative in the design of building elevations, rooflines, and facade elements.

7. Design that increases environmental sustainability, softens the building's edge, and provides visual interest for the pedestrian.

The proposed building is a single story, brick building, on a secured property, serving the purpose of public infrastructure. The proposed building is on a dead-end street and not within a highly visible area. Screening has been provided, as much as possible under Department of Homeland Security direction. The building is an accessory use to the primary, water reservoir use of the property, and is cohesive with Lincoln City's other pump station building design. This construction & use falls outside of the above "Intent" section of the Building Design standards; Outside of the base development standards (*including building height & setbacks)* the remaining building design standards, subsections D through K, have not been included in the narrative.

B. Specific Design Elements for Pearls. In addition to the other standards of this chapter, development in pearls must show conformance to the following pearl-specific design elements:
The property is not within in a pearl. The subsequent sub-sections do not apply.

C. Development Standards.

Standard			Required
1.	Building height.		
	a.	Minimum building height adjacent to public right-of-way.	15 feet
	b.	Maximum height.	Established by the underlying zone and calculated according to LCMC 17.52.190 and 17.52.200
2.	Ground floor windows.		
	a.	Minimum percentage of transparent windows adjacent to public right-of-way.	60%
3.	Building entrances.		
	a.	Minimum number of entrances connected to street.	One entrance, and at least one additional entrance for every 40 feet of building street frontage; or An average of at least one entrance for every 90 feet, if the internal building function prevents closer entrance spacing.
4.	Building articulation.		
	a.	Maximum individual wall plane size.	800 square feet
	b.	Minimum recess or projection of each wall plane.	i. Facades less than 100 feet long: 3 feet ii. Facades 100 feet or longer: 6 feet
	c.	Maximum length of individual wall plane.	12 feet
5.	Pedestrian shelters.		

Standard			Required
	a.	Minimum along street frontage.	75% of building frontage length

The minimum building height facing the right of way is 16'-11". This meets minimum and maximum height requirements.
Right of way transparency is not applicable due to building safety requirements.
A pedestrian access has been provided on two sides (West and north) of the building.
Building articulation wall planes have been met (<800 square feet facing the right of way)
Pedestrian shelter requirements are inappropriate due to the security requirements & use of the building.

IV. Conclusion

The existing water pump station at SE 15th and SE Oar Ave is direly in need of repair. The proposed development is a necessary infrastructure improvement to replace a failing water booster pump station. This continues to provide water service to the SE 19th, SE Oar, and SE Port neighborhoods, consolidates the city's public water infrastructure into a central location, complies with applicable code sections within chapters 17.55 and 17.56 of the Lincoln City Municipal Code, and falls in line with the existing use of the subject property. It is anticipated that the development will increase security of the sight, allow for future right of way development within the SE 15th right of way, and improve ADA compliance of the public sidewalk.

Per the above narrative, the proposed development meets the applicable code sections while additionally adhering to safety & security requirements put forward by the federal government's Department of Homeland Security.

APPENDICES

Appendix A

SE Oar Water Pressure Zone Overview

APPENDIX 'A'

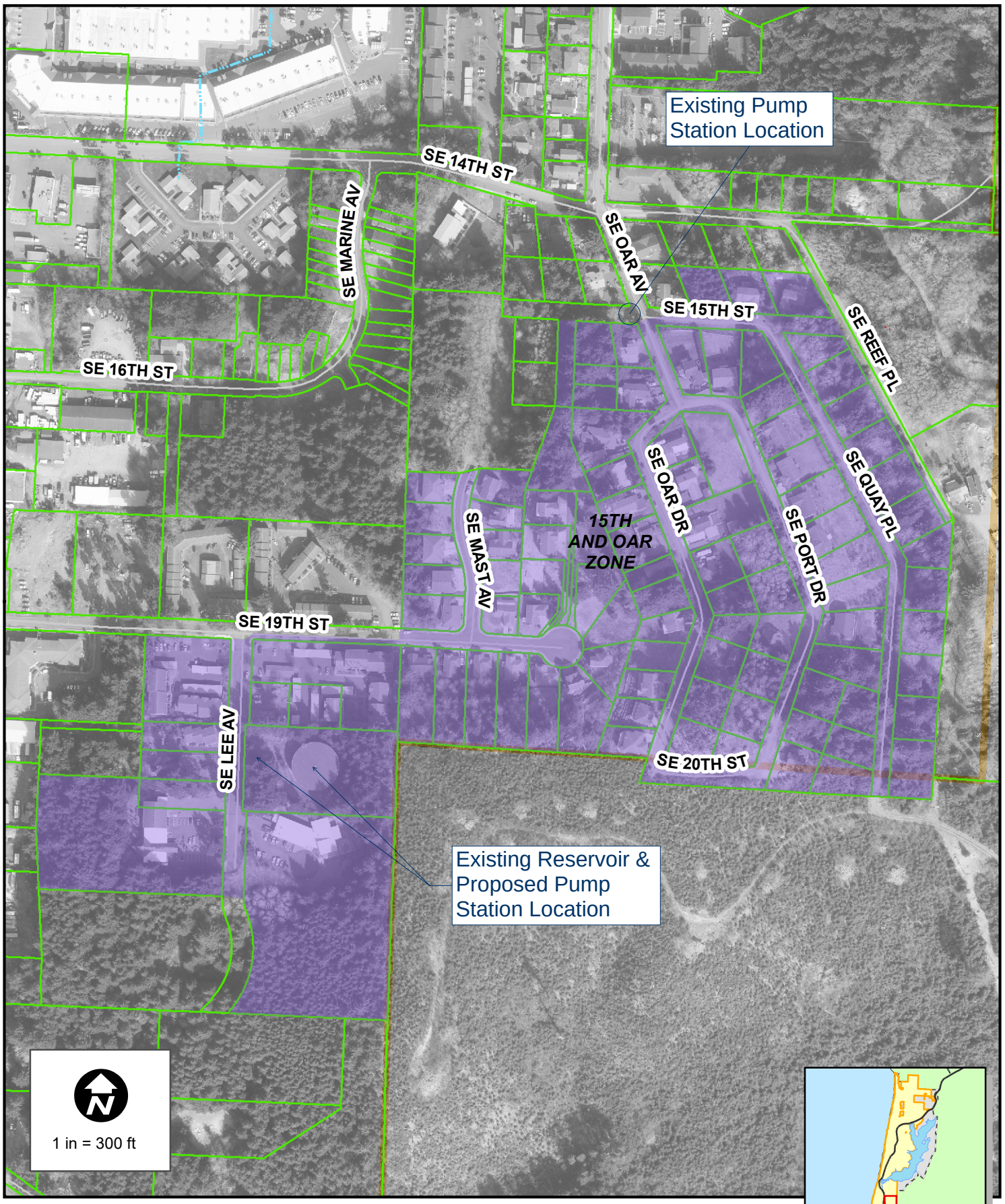

Vicinity Map

City of Lincoln City government use only. Use for any other purpose is entirely at the risk of the user. This product is for informational purposes and may not have been prepared for, or be suitable for legal, engineering, or surveying purposes. Users of this information should review or consult the primary data and information sources to ascertain the usability of the information.

Date: 4/26/2022

CITY OF LINCOLN CITY

19th ST & LEE ST PUMP STATION

FEBRUARY 2021

VICINITY MAP

NOT TO SCALE

EXISTING LEGEND

- SANITARY SEWER MANHOLE
- SS — SANITARY SEWER LINE
- STORM DRAIN MANHOLE
- CATCH BASIN
- SD — STORM DRAIN LINE
- FIRE HYDRANT
- WATER VALVE
- WATER METER
- TREE (TYPE VARIES ON DRAWING)
- FENCE
- PROPERTY LINE
- ELEC — EXISTING ELECTRICAL LINE
- EXISTING CURB LINE
- EXISTING EASEMENT
- W — EXISTING WATER
- GAS — EXISTING GAS
- PH — EXISTING PHONE

PROPOSED LEGEND

- WATER METER
- ASPHALT
- GRAVEL / HARD SURFACE
- XXX — CONTOUR
- RIGHT OF WAY
- CENTERLINE
- EASEMENT
- LOT LINE
- STORM MH
- GATE VALVE
- BUTTERFLY VALVE
- CHECK VALVE
- DITCH
- X — FENCE

OWNER

CITY OF LINCOLN CITY
P.O. BOX 50
801 SW HIGHWAY 101
LINCOLN CITY, OREGON 97367
CONTACT: TERRY CHAIMBERLIN, PE
PH: (541) 996-1292

CIVIL ENGINEER

HBH CONSULTING ENGINEERS, INC.
501 E 1ST STREET
NEWBERG, OREGON 97132
CONTACT: NATALIE JENNINGS, P.E.
PH: (503) 554-9553
FAX: (503) 537-9554
EMAIL: njennings@hbh-consulting.com

SURVEYOR

BARKER SURVEYING
3657 KASHMIR WAY SE
SALEM, OREGON 97317
CONTACT: GREG L. WILSON, PLS
PH: (503) 588-8800

VERTICAL DATUM

BENCHMARK UTILIZED: L.C.G.C. 200205

ELEV: 81.45 (NAVD 88)

DATUM HAS VERTCON DATUM SHIFT OF +3.31'
FROM PUBLISH NGVD 29 VALUE OF 78.14'

2" BRASS CAP LOCATED AT THE CENTER ONE
1/4 CORNER OF SECTION 11, APPROXIMATELY 50' NORTHWESTERLY
FROM PUMP HOUSE AND ADJACENT TO TWO LARGE SPRUCE STUMPS.

ABBREVIATIONS

@	AT	ODFW	OREGON DEPARTMENT OF FISH & WILDLIFE
AC	ASPHALT OR ASBESTOS CEMENT (PIPE)	P/L	PROPERTY LINE
ADPT	ADAPTER	PVC	POLYVINYL CHLORIDE
BV	BUTTERFLY VALVE	PVI	POINT OF VERTICAL INTERSECTION
CB	CATCH BASIN	RJ	RESTRAINED JOINT
C/L	CENTERLINE	ROW	RIGHT OF WAY
CMP	CORRUGATED METAL PIPE	RT	RIGHT
CO	CLEAN OUT	S	SOUTH
COTG	CLEAN OUT TO GRADE	SE	SOUTH EAST
CY	CUBIC YARDS	SW	SOUTH WEST
DR	DRIVE	STM	STORM DRAIN
DI	DUCTILE IRON	SF	SQUARE FEET
E	EAST	SAN	SANITARY SEWER
ELEV	ELEVATION	ST	STREET
EOP	EDGE OF PAVEMENT	STA	STATION
EX OR EXIST.	EXISTING	S=	SLOPE EQUALS
FCA	FLANGE COUPLING ADAPTER	S/W	SIDEWALK
FH	FIRE HYDRANT	TB	THRUST BLOCK
FLG	FLANGE	TYP	TYPICAL
GUT	GUTTER	VER	VERTICAL
GV	GATE VALVE	W	WEST
HDPE	HIGH DENSITY POLYETHYLENE	W/	WITH
HOR	HORIZONTAL	WTR	WATER
HP	HIGH POINT		
HYD	HYDRANT		
IE	INVERT ELEVATION		
LF	LINEAR FEET		
LN	LINE		
LP	LOW POINT		
LT	LEFT		
MH	MANHOLE		
MJ	MECHANICAL JOINT		
N	NORTH		
NE	NORTH EAST		
NTS	NOT TO SCALE		
NW	NORTH WEST		

LOCATE

(48 HOUR NOTICE PRIOR TO EXCAVATION)

OREGON LAW REQUIRES YOU TO FOLLOW THE RULES ADOPTED BY THE OREGON UTILITY NOTIFICATION CENTER. THOSE RULES ARE SET FORTH IN OAR 952-001-0010 THROUGH 952-001-0090 & ORS 757.542 THROUGH 757.562 AND ORS 757.993. YOU MAY OBTAIN COPIES OF THE RULES FROM THE CENTER BY CALLING (503) 246-1987. ONE CALL SYSTEM NUMBER 1-800-332-2344.

19TH AND LEE PUMP STATION

NOT TO SCALE

PROJECT SITE LOCATION

2010 SE LEE AVE.
LINCOLN CITY, OR 97367

TAX LOT INFORMATION

THIS PROJECT IS LOCATED IN THE SE 1/4 OF SECTION 22, T 7 S, R 11 W W.M. CITY OF LINCOLN CITY, LINCOLN COUNTY, OREGON

SHEET INDEX

C-1	COVER SHEET
C-2	EROSION CONTROL
C-3	DEMOLITION PLAN
C-4	SITE PLAN
C-5	PIPE CONNECTIONS
C-6	3-PHASE SERVICE BORING PLAN
C-7	PUMP HOUSE
C-8	PIPING SCHEMATIC
C-9	PUMP STATION DETAILS 1
C-10	PUMP STATION DETAILS 2

ELECTRICAL DRAWINGS TO BE ADDED LATER.
STRUCTURAL DRAWINGS TO BE ADDED LATER.

REGISTERED PROFESSIONAL ENGINEER 88834PE OREGON MAY 22, 2015 NATALIE CAMILLE JENNINGS
PRELIMINARY
EXPIRES 6/30/2023

HBH CONSULTING ENGINEERS
501 E First Street
Newberg, Oregon 97132
503/554-9553 ■ fax 503/537-9554
email: mail@hbh-consulting.com

Designed By: NCJ | Drawn By: ARB | Checked By: ARC | Submittal No: OHA
File: L:\2019-019.04\4-Design\DWG\Cover Sheet.dwg

REV.	DATE	DESCRIPTION	BY

0" 1"
IF THIS LINE IS NOT 1 INCH SCALE IS NOT AS SHOWN

LINCOLN CITY
801 SW HIGHWAY 101, LINCOLN CITY, OR 97367

19TH AND LEE ST PUMP STATION
LINCOLN CITY, OR
COVER SHEET

Sheet No. C-1
Date 2/28/2022
1 of 10

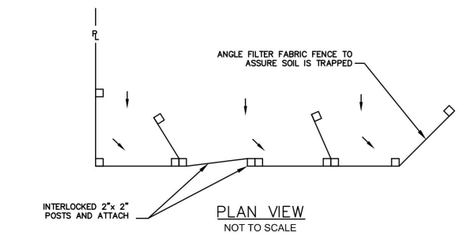

PLAN VIEW
NOT TO SCALE

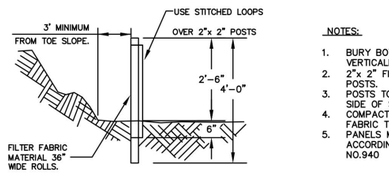

PROFILE
NOT TO SCALE

NOTES:

1. BURY BOTTOM OF FILTER FABRIC 6" VERTICALLY BELOW FINISHED GRADE.
2. 2"x 2" FIR, PINE OR STEEL FENCE POSTS.
3. POSTS TO BE INSTALLED ON UPHILL SIDE OF SLOPE.
4. COMPACT BOTH SIDES OF FILTER FABRIC TRENCH.
5. PANELS MUST BE PLACED ACCORDING TO SPACING ON DETAIL NO.940

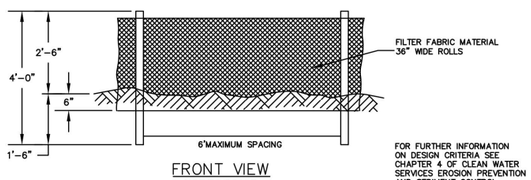

FRONT VIEW
NOT TO SCALE

FOR FURTHER INFORMATION ON DESIGN CRITERIA SEE CHAPTER 4 OF CLEAN WATER SERVICES EROSION PREVENTION AND SEDIMENT CONTROL PLANNING AND DESIGN MANUAL.

LCPW STANDARD SILT FENCE

DETAIL: 115 LCPW E&SC - Silt Fence

REVISED: APRIL 2019

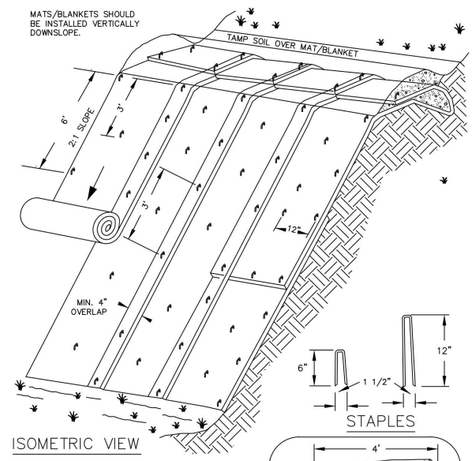

ISOMETRIC VIEW

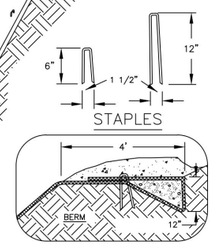

STAPLES

TYPICAL SLOPE SOIL STABILIZATION

NOT TO SCALE

NOTES:

1. SLOPE SURFACE SHALL BE FREE OF ROCKS, CLODS, STICKS AND GRASS. MATS/BLANKETS SHALL HAVE GOOD SOIL CONTACT.
2. SEE DETAIL: 155, 160 LCPW E&SC FOR SLOPE PREPARATION TO PREVENT RILLING UNDER MATS
3. APPLY PERMANENT SEEDING BEFORE PLACING BLANKETS.
4. LAY BLANKETS LOOSELY AND STAKE OR STAPLE TO MAINTAIN DIRECT CONTACT WITH THE SOIL. DO NOT STRETCH.
5. STAKING OR STAPLING LAYOUT PER MANUFACTURERS SPECIFICATIONS.

MATTING SLOPE INSTALLATION

DETAIL: 150 LCPW E&SC - MATTING SLOPE INSTALLATION

REVISED: APRIL 2019

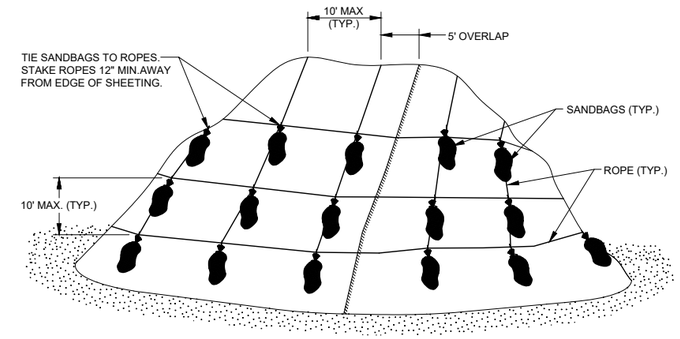

NOTES:

1. INSTALL PLASTIC SHEETING VERTICALLY DOWN SLOPE.

2. INSTALL PLASTIC SHEETING SO EDGES OVERLAP AND ARE SHINGLED AWAY FROM PREVAILING WINDS.

STOCK PILING

NOT TO SCALE

EROSION AND SEDIMENT CONTROL BMP IMPLEMENTATION:

1. ALL BASE ESC MEASURES (INLET PROTECTION, PERIMETER SEDIMENT CONTROL, GRAVEL CONSTRUCTION ENTRANCES, ETC.) MUST BE IN PLACE, FUNCTIONAL AND APPROVED IN AN INITIAL INSPECTION, PRIOR TO COMMENCEMENT OF CONSTRUCTION ACTIVITIES.

2. ALL "SEDIMENT BARRIERS (TO BE INSTALLED AFTER GRADING)" SHALL BE INSTALLED IMMEDIATELY FOLLOWING ESTABLISHMENT OF FINISHED GRADE AS SHOWN ON THESE PLANS.

3. LONG TERM SLOPE STABILIZATION MEASURES SHALL BE IN PLACE OVER ALL EXPOSED SOILS BY OCTOBER.

4. "WET WEATHER" CONSTRUCTION MEASURES NEED TO BE APPLIED BETWEEN OCTOBER 1ST AND MAY 31ST.

5. SEED USED FOR TEMPORARY OR PERMANENT SEEDING SHALL BE COMPOSED OF ONE OF THE FOLLOWING MIXTURES, UNLESS OTHERWISE AUTHORIZED:
   A. DWARF GRASS MIX (MIN. 100 LB./AC.)
   B. BLUE WILDRYE – ELYMUS GLAUCUS (45%)
   C. WESTERN FESCUE GRASS (30%)
   D. CALIFORNIA BROME GRASS – BROMUS CARINATUS (10%)
   E. CANADA BLUEGRASS – POA COMPRESSA (10%)
   F. HEAL-ALL – PRUNELLA VULGARIS VAR. LANCEOLATA (5%)

6. SLOPES TO RECEIVE TEMPORARY OR PERMANENT SEEDING SHALL HAVE THE SURFACE ROUGHENED BY MEANS OF TRACK-WALKING OR THE USE OF OTHER APPROVED IMPLEMENTS. SURFACE ROUGHENING IMPROVES SEED BEDDING AND REDUCES RUN-OFF VELOCITY.

7. LONG TERM SLOPE STABILIZATION MEASURES SHALL BE PROVIDED BY THE CITY OF LINCOLN CITY. LONG TERM SLOPE STABILIZATION MEASURES ARE NOT THE RESPONSIBILITY OF THE CONTRACTOR UNLESS THE CONTRACTOR DISTURBS AN AREA OUTSIDE THE PROJECT BOUNDS. SLOPE STABILIZATION MEASURES ARE TO INCLUDE THE ESTABLISHMENT OF PERMANENT VEGETATIVE COVER VIA SEEDING WITH APPROVED MIX AND APPLICATION RATE OR AN APPROVED COMBINATION OF SHRUBS AND VEGETATION.

8. TEMPORARY SLOPE STABILIZATION MEASURES SHALL INCLUDE COVERING EXPOSED SOIL WITH PLASTIC SHEETING, STRAW MULCHING, OR OTHER APPROVED MEASURES.

9. STOCKPILED SOIL OR STRIPPINGS SHALL BE PLACED IN A STABLE LOCATION AND CONFIGURATION. DURING "WET WEATHER" PERIODS, STOCKPILES SHALL BE COVERED WITH PLASTIC SHEETING OR STRAW MULCH. SEDIMENT FENCE IS REQUIRED AROUND THE PERIMETER OF THE STOCKPILE.

10. EXPOSED CUT OR FILL AREAS SHALL BE STABILIZED THROUGHOUT THE USE OF TEMPORARY SEEDING AND MULCHING, EROSION CONTROL BLANKETS OR MATS, MID-SLOPE SEDIMENT FENCES OR WATTLES, OR OTHER APPROPRIATE MEASURES. SLOPES EXCEEDING 25% MAY REQUIRE ADDITIONAL EROSION CONTROL MEASURES.

11. AREAS SUBJECT TO WIND EROSION SHALL USE APPROPRIATE DUST CONTROL MEASURES INCLUDING THE APPLICATION OF A FINE SPRAY OF WATER, PLASTIC SHEETING, STRAW MULCHING, OR OTHER APPROVED MEASURES.

12. CONSTRUCTION ENTRANCES SHALL BE INSTALLED AT THE BEGINNING OF CONSTRUCTION AND MAINTAINED FOR THE DURATION OF THE PROJECT.

13. SATURATED MATERIALS THAT ARE HAULED OFF-SITE MUST BE TRANSPORTED IN WATER-TIGHT TRUCKS TO ELIMINATE SPILLAGE OF SEDIMENT AND SEDIMENT-LADEN WATER.

14. AN AREA SHALL BE PROVIDED FOR THE WASHING OUT OF CONCRETE TRUCKS IN A LOCATION THAT DOES NOT PROVIDE RUN-OFF THAT CAN ENTER THE STORM WATER SYSTEM. IF THE CONCRETE WASH-OUT AREA CAN NOT BE CONSTRUCTED GREATER THAN 50' FROM ANY DISCHARGE POINT, SECONDARY MEASURES SUCH AS BERMS OR TEMPORARY SETTLING PITS MAY BE REQUIRED. THE WASH-OUT SHALL BE LOCATED WITHIN SIX FEET FOR TRUCK ACCESS AND BE CLEANED WHEN IT REACHES 50% OF THE CAPACITY.

15. SWEEPING FROM EXPOSED AGGREGATE CONCRETE SHALL NOT BE TRANSFERRED TO THE STORM WATER SYSTEM. SWEEPINGS SHALL BE PICKED UP AND DISPOSED IN THE TRASH.

16. USE BMP'S SUCH AS CHECK-DAMS, BERMS, AND INLET PROTECTION TO PREVENT RUN-OFF FROM REACHING DISCHARGE POINTS.

17. ALL BASE ESC MEASURES (INLET PROTECTION, PERIMETER SEDIMENT CONTROL, GRAVEL CONSTRUCTION ENTRANCES, ETC.) MUST BE IN PLACE, FUNCTIONAL AND APPROVED IN AN INITIAL INSPECTION PRIOR TO COMMENCEMENT OF CONSTRUCTION ACTIVITIES.

18. SEDIMENT BARRIERS APPROVED FOR USE INCLUDE SEDIMENT FENCE, BERMS CONSTRUCTED OUT OF MULCH OR OTHER SUITABLE MATERIAL, STRAW WATTLES, OR OTHER APPROVED MATERIALS.

19. SENSITIVE RESOURCES INCLUDING, BUT NO LIMITED TO, TREES, WETLANDS AND RIPARIAN PROTECTION AREAS SHALL BE CLEARLY DELINEATED WITH ORANGE CONSTRUCTION FENCING OR CHAIN LINK FENCING IN A MANNER THAT IS CLEARLY VISIBLE TO ANYONE IN THE AREA. NO ACTIVITIES ARE PERMITTED TO OCCUR BEYOND THE CONSTRUCTION BARRIER.

20. RUN-ON AND RUN-OFF CONTROLS SHALL BE IN PLACE AND FUNCTIONING PRIOR TO BEGINNING SUBSTANTIAL CONSTRUCTION ACTIVITIES. RUN-ON AND RUN-OFF CONTROL MEASURES INCLUDE: SLOPE DRAINS (WITH OUTLET PROTECTION), CHECK DAMS, SURFACE ROUGHENING, AND BANK STABILIZATION.

REGISTERED PROFESSIONAL ENGINEER 88824PE OREGON MAY 22, 2015 STEVE CAMILLE JENNINGS
PRELIMINARY
EXPIRES 6/30/2023

H B H CONSULTING ENGINEERS
501 E First Street
Newberg, Oregon 97132
503/554-9553 ■ fax 503/537-9554
email: mail@hbh-consulting.com

Designed By: NCJ | Drawn By: DRP | Checked By: ARC | Submittal No: OHA
File: L:\2019-019.04\4-Design\DWG\Erosion Control.dwg

REV.	DATE	DESCRIPTION	BY
19			

0" 1"
IF THIS LINE IS NOT 1 INCH SCALE IS NOT AS SHOWN

LINCOLN CITY
801 SW HIGHWAY 101, LINCOLN CITY, OR 97367

19TH AND LEE ST PUMP STATION
LINCOLN CITY, OR

EROSION CONTROL

Date: 2/28/2022
Sheet No. C-2
2 of 10

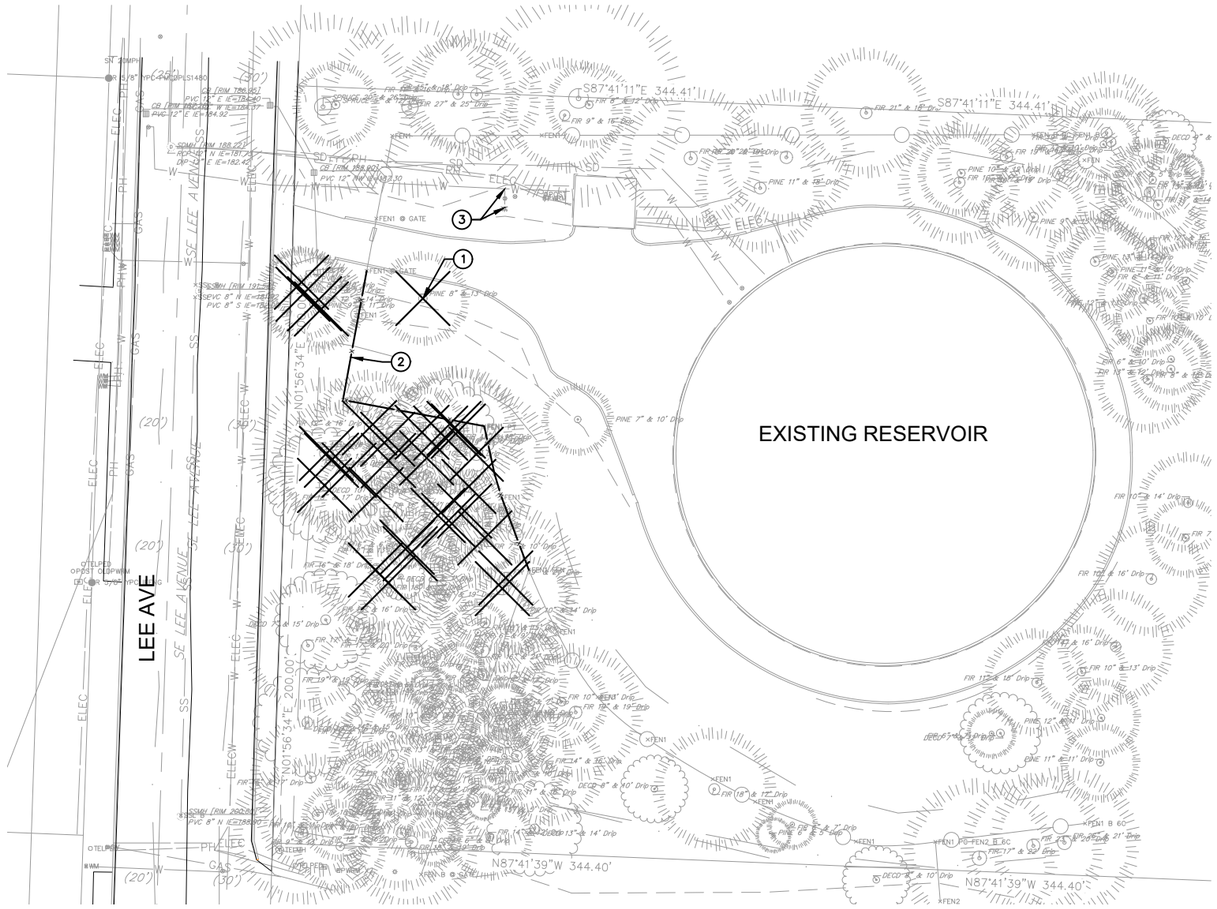

RESERVOIR SITE

SCALE: 1" = 20'

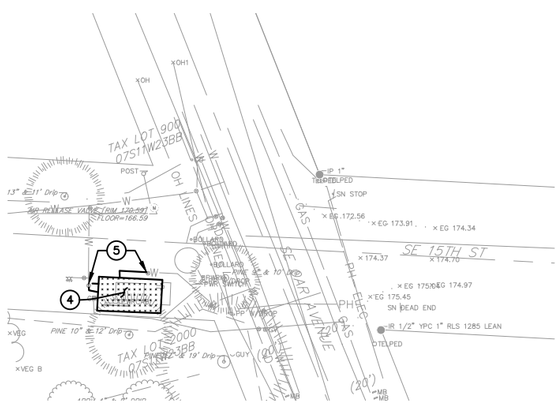

EXISTING PUMP STATION

SCALE: 1" = 20'

DEMOLITION PLAN GENERAL NOTES

1. TREE REMOVAL IS THE RESPONSIBILITY OF CONTRACTOR. CONTRACTOR IS RESPONSIBLE FOR THE COST OR PROFIT FROM REMOVING ANY LUMBER FROM THE PROPERTY.
2. CONTRACTOR IS RESPONSIBLE FOR ALL DISPOSAL COSTS OF ANY REMOVED EQUIPMENT.
3. ENSURE THE ABANDONED PUMP STATION IS HYDRAULICALLY AND ELECTRICALLY STABLE IN THE CONDITION IT IS LEFT IN.

(XX) DEMOLITION PLAN KEYED NOTES

1. REMOVE (30) EXISTING TREES (TYP)
2. REMOVE AND RELOCATE SECTION OF EXISTING FENCE
3. REMOVE EXISTING FIRE HYDRANT AND CAP THE TEE DOWNSTREAM OF THE VALVE.
4. ABANDON EXISTING PUMP STATION AT SE 15TH ST.
5. CLOSE AND CAP VALVE WITH BLIND FLANGE WITH BLOWOFF.

SCALE 1"=10' (HORZ.)

10 5 2.5 0 10

REGISTERED PROFESSIONAL ENGINEER 86634PE OREGON MAY 29, 2015 NATALIE CAMILLE JENNINGS

EXPIRES 6/30/2023

H B H CONSULTING ENGINEERS
501 E First Street
Newberg, Oregon 97132
503/554-9553 ■ fax 503/537-9554
email: mail@hbh-consulting.com

Designed By: NCJ | Drawn By: DRP | Checked By: ARC | Submittal No: OHA

File: L:\2019-019.04\4-Design\DWG\Demo.dwg

REV.	DATE	DESCRIPTION	BY

0" 1"
IF THIS LINE IS NOT 1 INCH SCALE IS NOT AS SHOWN

LINCOLN CITY
801 SW HIGHWAY 101, LINCOLN CITY, OR 97367

19TH AND LEE ST PUMP STATION
LINCOLN CITY, OR

DEMOLITION PLAN

Sheet No. C-3

Date 2/28/2022

3 of 10

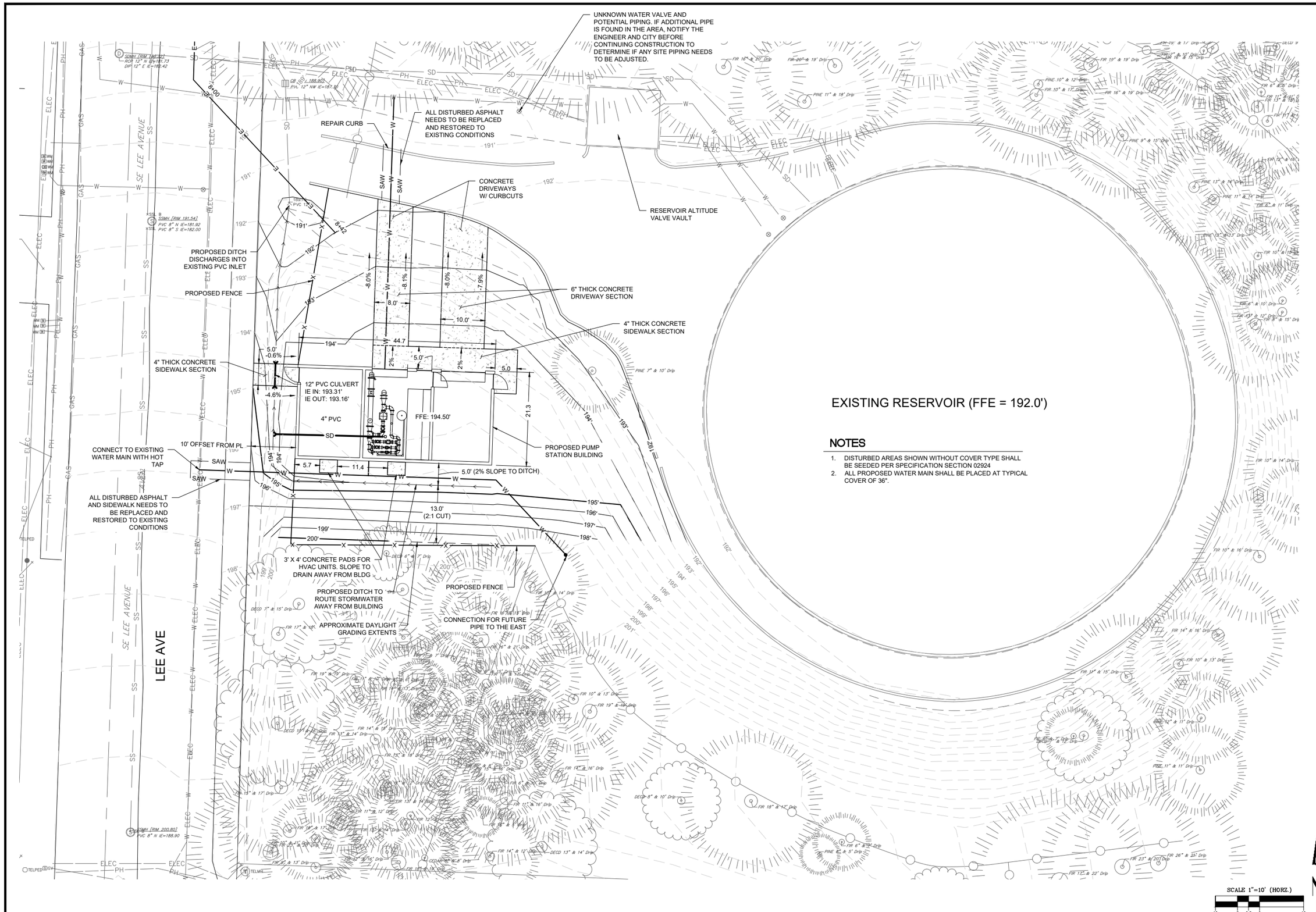

NOTES

1. DISTURBED AREAS SHOWN WITHOUT COVER TYPE SHALL BE SEEDED PER SPECIFICATION SECTION 02924
2. ALL PROPOSED WATER MAIN SHALL BE PLACED AT TYPICAL COVER OF 36".

REGISTERED PROFESSIONAL ENGINEER
OREGON
MAY 22, 2015
NEVE CAMILLE JENNINGS
EXPIRES 6/30/2023
PRELIMINARY

H B H CONSULTING ENGINEERS
501 E First Street
Newberg, Oregon 97132
503/554-9553 ■ fax 503/537-9554
email: mail@hbh-consulting.com

Designed By: NCJ	Drawn By: DRP	Checked By: ARC	Submittal No: OHA
File:			L:\2019-019.04\4-Design\DWG\L.layout.dwg

REV.	DATE	DESCRIPTION	BY

0" 1"
IF THIS LINE IS NOT 1 INCH SCALE IS NOT AS SHOWN

LINCOLN CITY
801 SW HIGHWAY 101, LINCOLN CITY, OR 97367

19TH AND LEE ST PUMP STATION
LINCOLN CITY, OR

SITE PLAN

Date: 2/28/2022
Sheet No. C-4
4 of 10

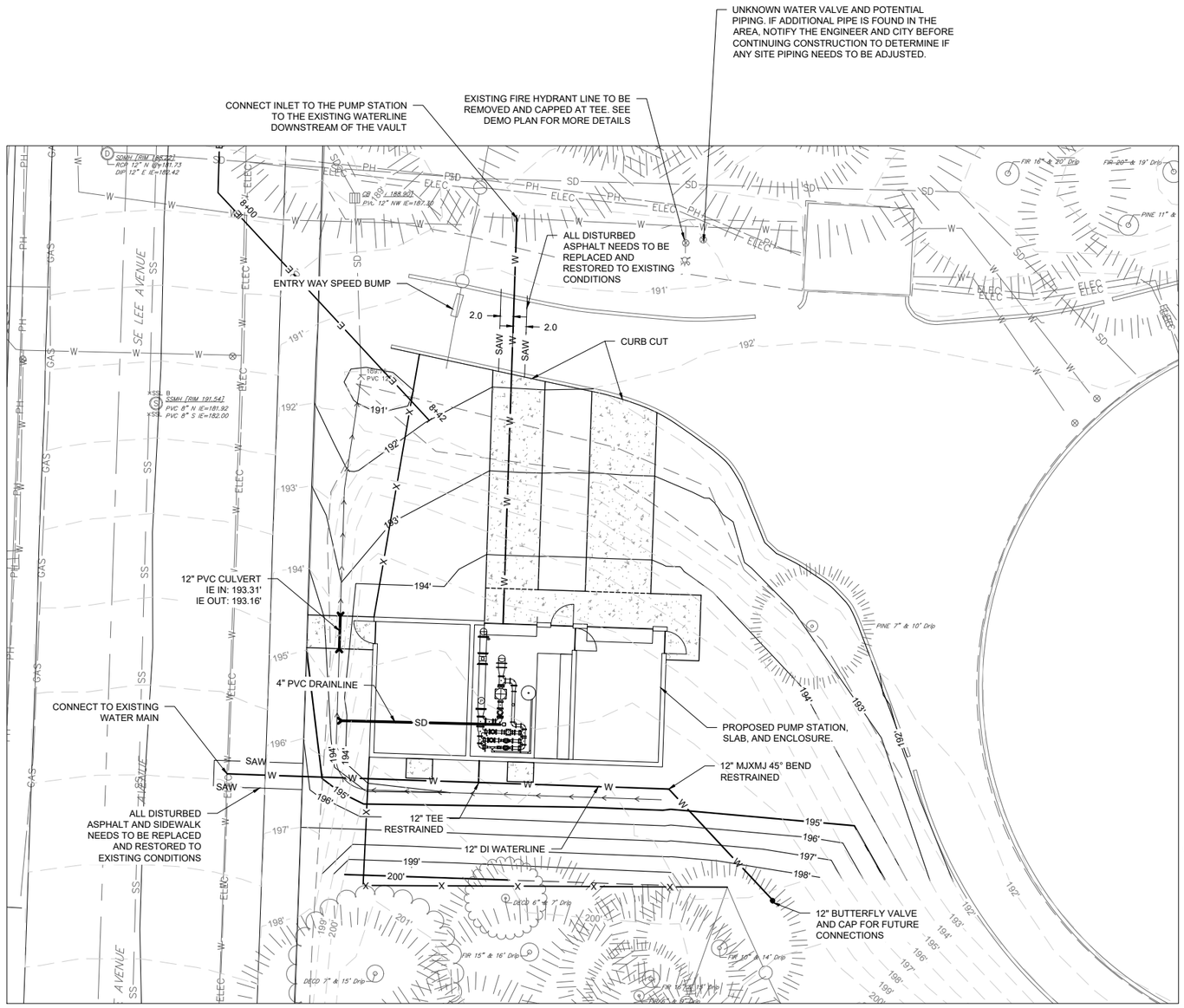

PIPE CONNECTION TO EXISTING SYSTEM OVERVIEW

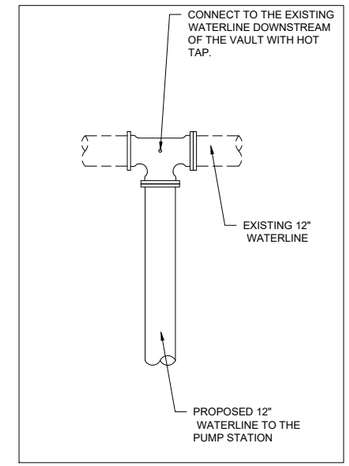

PIPE INLET CONNECTION TO EXISTING SYSTEM

N.T.S.

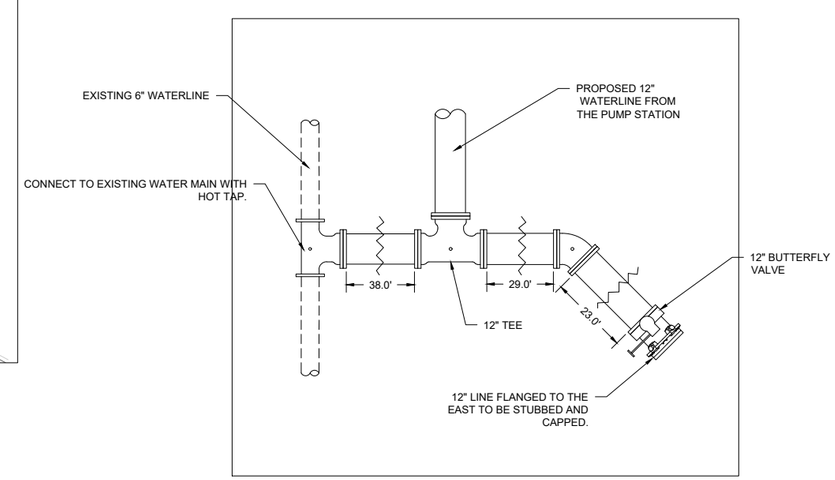

PIPE OUTLET CONNECTION TO EXISTING SYSTEM

N.T.S.

SCALE 1"=5' (HORZ.)

REGISTERED PROFESSIONAL ENGINEER 89824PE OREGON MAY 22, 2015 NATHAN CAMILLE JENNINGS

PRELIMINARY

EXPIRES 6/30/2023

H B H CONSULTING ENGINEERS
501 E First Street
Newberg, Oregon 97132
503/554-9553 ■ fax 503/537-9554
email: mail@hbh-consulting.com

Designed By: NCJ | Drawn By: DRP | Checked By: ARC | Submittal No: OHA
File: L:\2019-019.04\4-Design\DWG\Layout.dwg

REV.	DATE	DESCRIPTION	BY

0" 1"
IF THIS LINE IS NOT 1 INCH SCALE IS NOT AS SHOWN

LINCOLN CITY
801 SW HIGHWAY 101, LINCOLN CITY, OR 97367

19TH AND LEE ST PUMP STATION
LINCOLN CITY, OR

PIPE CONNECTIONS

Sheet No. C-5
Date 2/28/2022
5 of 10

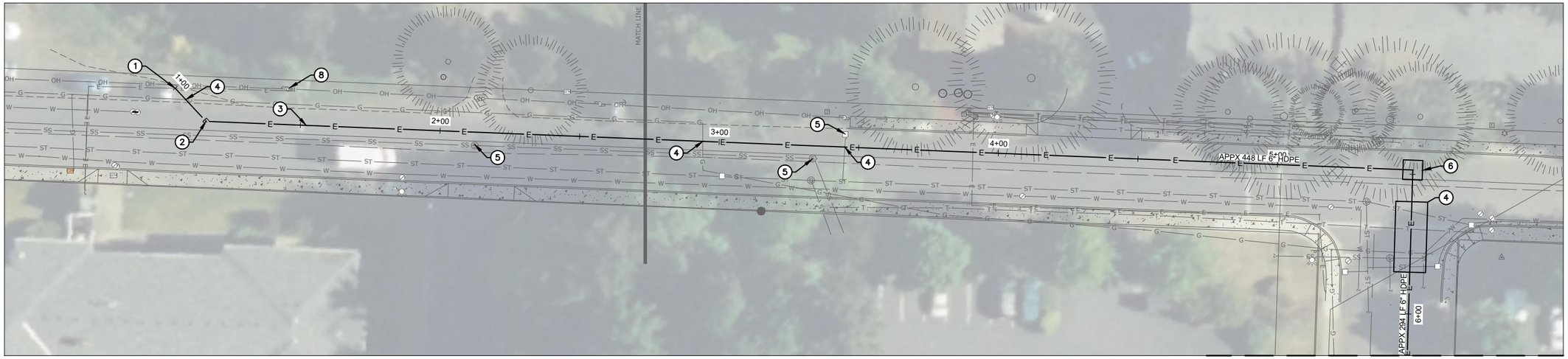

19th STREET SERVICE BORING PLAN

11x17: 1"=40'
22x34: 1"=20'

MATCH LINE - SEE LEE AVENUE SERVICE BORING PLAN ON THIS SHEET

MATCH LINE - SEE 19th STREET SERVICE BORING PLAN ON THIS SHEET

LEE AVENUE SERVICE BORING PLAN

11x17: 1"=40'
22x34: 1"=20'

SERVICE BORING PLAN KEYED NOTES

1. BEGIN DIRECTIONAL BORE AT NEW CONDUIT TERMINATION POLE. USE 90 DEGREE FIBERGLASS SWEEPS (6" CONDUIT) FOR TRANSITION TO NEW POLE. POLES EXACT LOCATION TO BE DETERMINED.
2. 45° CHANGE IN DIRECTION (FIBERGLASS LONG SWEEPS)
3. BORE HDPE CONDUIT. SEE SERVICE BORING PLAN GENERAL NOTES ON THIS SHEET.
4. UTILITY CROSSING. SEE SERVICE BORING PLAN GENERAL NOTES 2 & 3 ON THIS SHEET.
5. STRUCTURE PROXIMITY. SEE SERVICE BORING PLAN GENERAL NOTE 3 ON THIS SHEET.
6. INSTALL 776-MH-PCORP PRECAST VAULT WITH PCORP #7992595 FULL TRAFIC RATED LID. SEE ELECTRICAL PLAN GENERAL NOTE 4 ON THIS SHEET. RECONSTRUCT STREET SECTION TO LINCOLN CITY STANDARDS AND SPECIFICATIONS.
7. END HDPE DIRECTIONAL BORE AT NEW TRANSFORMER PAD PER ELECTRICAL SHEET E1. SEE E1 WITH PP MARKUPS 2-9-22 FOR CONDUIT TERMINATION AT VAULT NOTES
8. EXISTING POLE #228701

SERVICE BORING PLAN GENERAL NOTES

1. ELECTRICAL CONDUIT HDPE PIPING SHALL MEET SPECIFICATIONS AND REQUIREMENTS OF PACIFCORP STANDARD ZG 031. DEPTH OF PIPING TO BE 30" MINIMUM AND 48" MAXIMUM. CONTRACTOR TO CONTACT THE DESIGN ENGINEER AND PACIFICORP IMMEDIATELY IF A CONFLICT ARISES THAT REQUIRES A DEVIATION FROM THESE DEPTHS FOR REVIEW AND APPROVAL. CONDUIT INSTALLATION SHALL CONFORM TO PACIFCORP POLICY 343. BOTH OF THESE DOCUMENTS ARE AVAILABLE AT: https://www.pacificpower.net/working-with-us/builders-contractors/electric-service-requirements.html
2. CONTRACTOR TO POTHOLE ALL ANTICIPATED CROSSINGS (MARKED OR UNMARKED ON THIS PLAN SET) BEFORE BEGINNING CONSTRUCTION OF THE HDPE BORE. CONTRACTOR TO TO ADJUST BORE VERTICAL ALIGNMENT ACCORDINGLY TO MAINTAIN MINIMUM 12" VERTICAL SEPARATION BETWEEN OUTER EDGE OF PIPING AT CROSSINGS. CONTRACTOR TO CONTACT THE DESIGN ENGINEER AND PACIFICORP IMMEDIATELY IF A CONFLICT ARISES THAT REQUIRES A DEVIATION FOR REVIEW AND APPROVAL.
3. CONTRACTOR TO MAINTAIN MINIMUM 36" OUTER EDGE OF PIPE TO OUTER EDGE OF PIPE HORIZONTAL SEPARATION BETWEEN WATER, SANITARY, AND STORM UTILITIES AND STRUCTURES. CONTRACTOR MAINTAIN MINIMUM 12" OUTER EDGE OF PIPE TO OUTER EDGE OF PIPE SEPARATION BETWEEN GAS/COMMUNICATION UTILITIES AND STRUCTURES. CONTRACTOR TO DEFLECT PIPING FROM PROPOSED ALIGNMENT IF NECESSARY TO MEET THESE SPACING REQUIREMENTS.
4. THE CONTRACTOR IS RESPONSIBLE TO ENSURE THAT ALL EARTH UNDER THE VAULT IS COMPACTED TO WITHIN 2% SLOPE PRIOR TO SETTING THE VAULT. A CLEAN 6-INCH BASE OF ¾"-MINUS GRAVEL SHALL BE PROVIDED UNDER THE ENCLOSURE, AND MUST BE COMPACTED TO 90% OF DRY DENSITY. THE INTERFACE BETWEEN THE COVER/FRAME ASSEMBLY AND THE ENCLOSURE SHALL BE SEALED USING A WATERPROOF SUBSTANCE SUCH AS TAR OR MASTIC SEAL. RIM TO BE SET AT EXISTING GRADE.
5. A SURVEY WAS NOT COMPLETED FOR THE ENTIRE LENGTH OF THE PROJECT. THERE ARE UTILITIES THAT EXIST THAT ARE NOT SHOWN ON THE PLANS. CONTRACTOR TO ORDER LOCATES FOR THE FULL PROJECT LENGTH, NOT JUST THE UTILITIES SHOWN TO FIND ALL UTILITY CONFILCTS.
6. THE CONTRACTOR IS RESPONSIBLE FOR THE CONDUIT, VAULT, AND BORING AND ITEMS SPECIFICALLY SHOWN ON THIS DRAWING AND THE ELECTRICAL DRAWINGS. THE ELECTRICAL SERVICE WIRE AND CONNECTIONS WILL BE PROVIDED BY PACIFICORP.

SCALE 1"=20' (HORZ.)
20 10 5 0 20

REGISTERED PROFESSIONAL ENGINEER 88834PE OREGON MAY 22, 2015 NATHAN CAMILLE JENNINGS
PRELIMINARY
EXPIRES 6/30/2023

H B H CONSULTING ENGINEERS
501 E First Street
Newberg, Oregon 97132
503/554-9553 ■ fax 503/537-9554
email: mail@hbh-consulting.com

Designed By: NCJ | Drawn By: ARB | Checked By: ARC | Submittal No: OHA
File: L:\2019-019.04\4-Design\DW\GILayout.dwg

REV.	DATE	DESCRIPTION	BY

0" 1"
IF THIS LINE IS NOT 1 INCH SCALE IS NOT AS SHOWN

LINCOLN CITY
801 SW HIGHWAY 101, LINCOLN CITY, OR 97367

19TH AND LEE ST PUMP STATION
LINCOLN CITY, OR

3-PHASE SERVICE BORING PLAN

Date: 2/28/2022
Sheet No. C-6
6 of 10

FOUNDATION SCHEDULE*

MARK	SIZE	REINFORCING
FC2.0	2'-0" x 15" THICK CONTINUOUS	(3) #5 CONTINUOUS AT BOTTOM
FC2.8	2'-8" x 15" THICK CONTINUOUS	(4) #5 CONTINUOUS TOP & BOTTOM

*NOTE: SUBGRADE PREPARATION TO BE PER GEOENGINEERS INC. REPORT DATED AUGUST 2021.

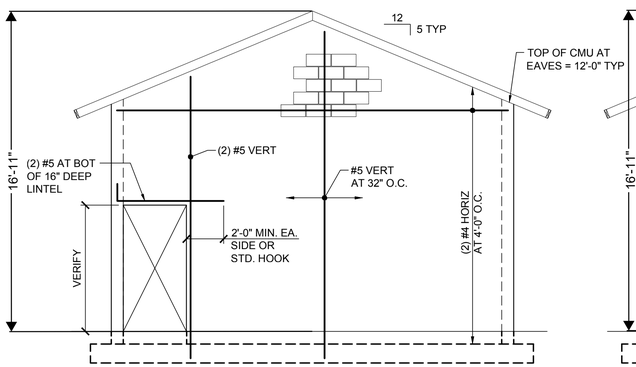

NOTE:
SEE STRUCTURAL NOTES ON S1 FOR ADDITIONAL REINFORCING REQUIREMENTS

2a S3 WEST ELEVATION
1/4" = 1'-0"

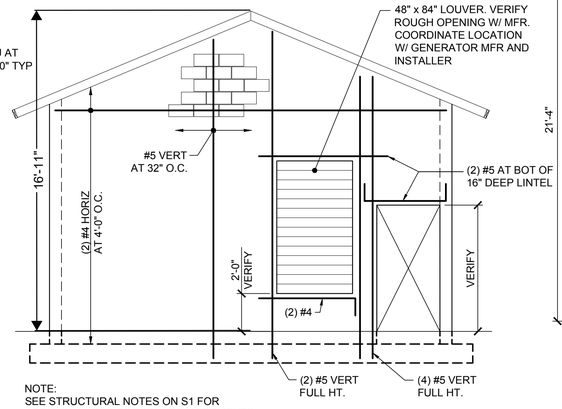

NOTE:
SEE STRUCTURAL NOTES ON S1 FOR ADDITIONAL REINFORCING REQUIREMENTS

2b S3 EAST ELEVATION
1/4" = 1'-0"

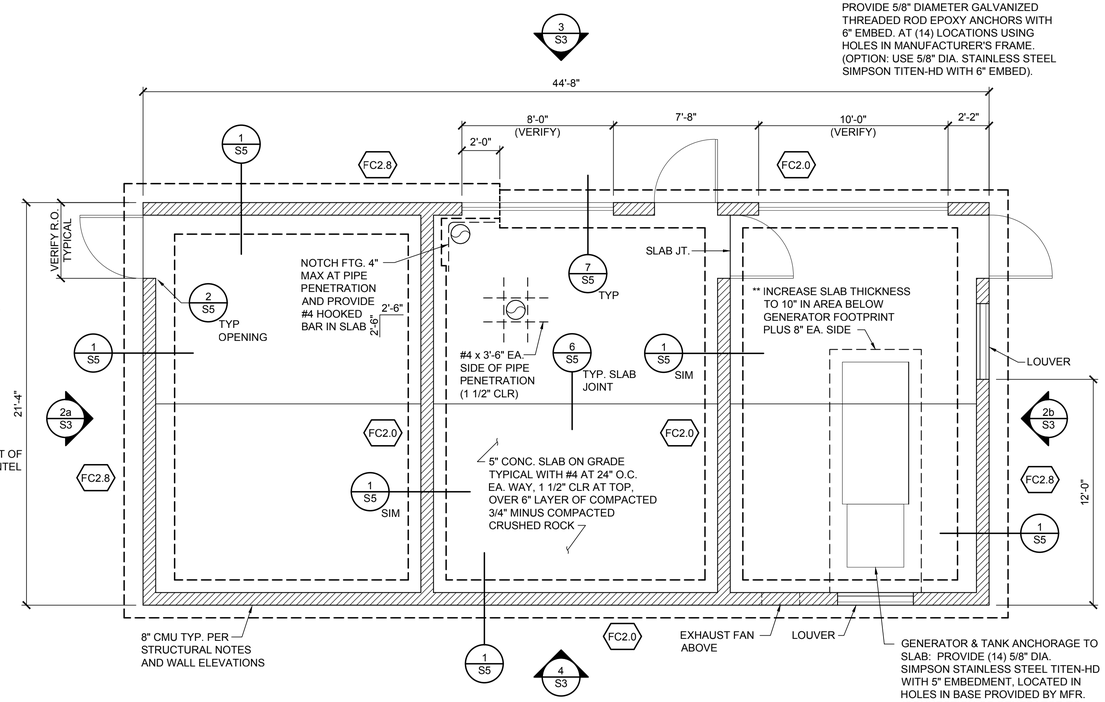

NORTH

1 S3 FOUNDATION PLAN
1/4" = 1'-0"

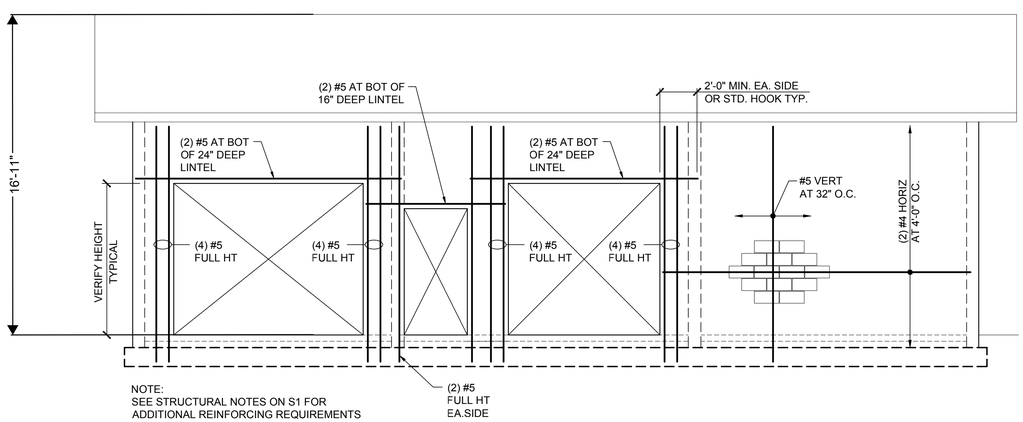

NOTE:
SEE STRUCTURAL NOTES ON S1 FOR ADDITIONAL REINFORCING REQUIREMENTS

3 S3 NORTH ELEVATION
1/4" = 1'-0"

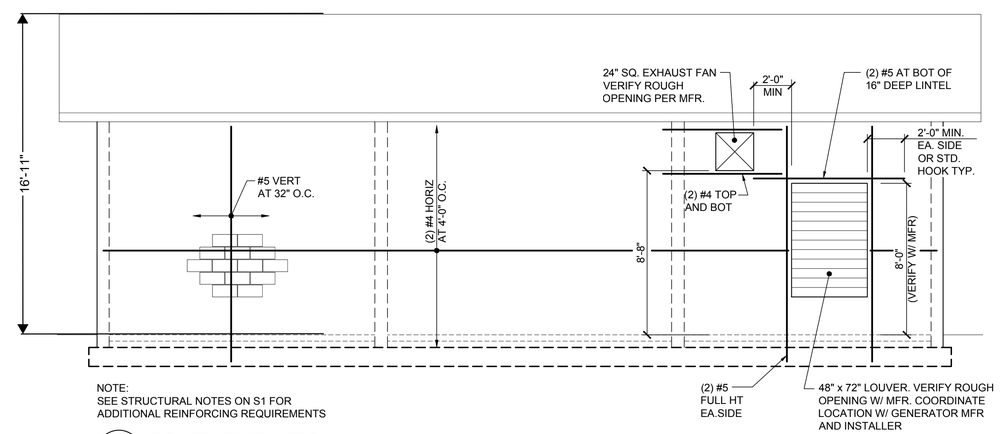

NOTE:
SEE STRUCTURAL NOTES ON S1 FOR ADDITIONAL REINFORCING REQUIREMENTS

4 S3 SOUTH ELEVATION
1/4" = 1'-0"

STRUCTURAL REGISTERED PROFESSIONAL ENGINEER 17895 OREGON JULY 25, 1995 DOUGLAS E. PAOLA
RENEWS: 12-31-2022

H B H CONSULTING ENGINEERS
501 E First Street
Newberg, Oregon 97132
503/554-9553 fax 503/537-9554
email: mail@hbh-consulting.com

Structural - Civil Engineers
6443 SW Beaverton-Hillsdale Hwy, suite 210 Portland, OR 97221 ph:503.203.8111 fx:503.203.8122 www.wdyi.com
WDY

©2022 WDY, INC.

REV.	DATE	DESCRIPTION	BY

0" 1"
IF THIS LINE IS NOT 1 INCH SCALE IS NOT AS SHOWN

Designed By: | Drawn By: GBB | Checked By: DP | Submittal No:
File:

LINCOLN CITY
801 SW HIGHWAY 101, LINCOLN CITY, OR 97367

19TH AND LEE ST PUMP STATION
LINCOLN CITY, OR
FOUNDATION AND ROOF FRAMING PLAN

Date: 3/14/2022
Sheet No. S3 OF

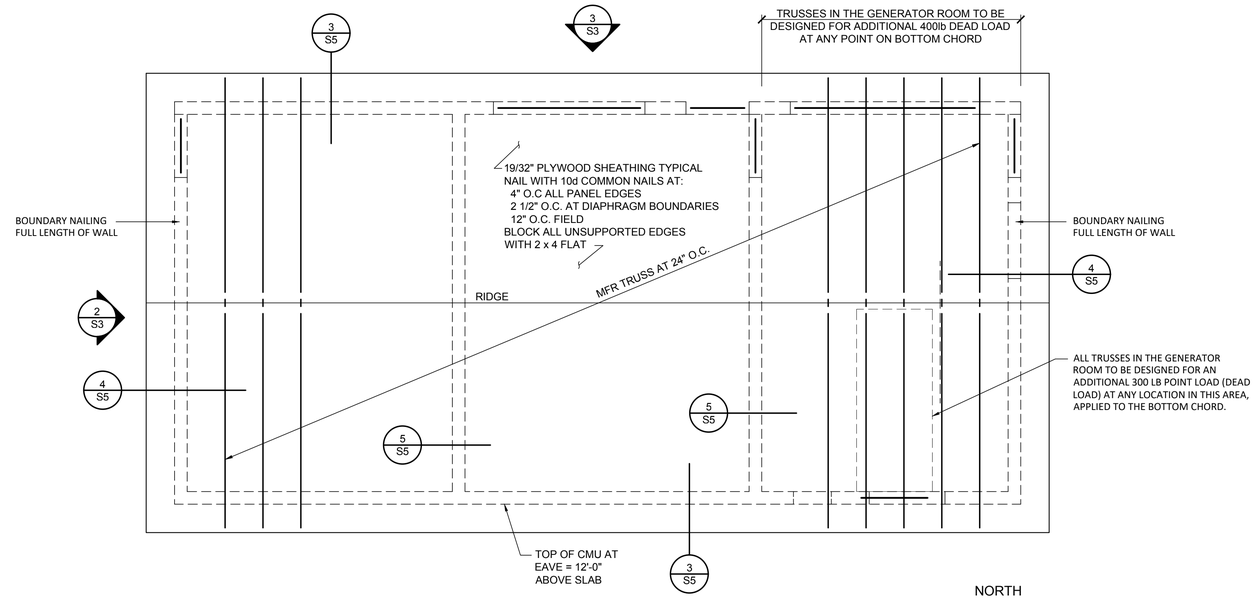

1 / S4 ROOF FRAMING PLAN
1/4" = 1'-0"

NORTH

STRUCTURAL REGISTERED PROFESSIONAL ENGINEER 17895 OREGON JULY 25, 1985 DOUGLAS E. PAOLA

RENEWS: 12-31-2022

HBH CONSULTING ENGINEERS
501 E First Street
Newberg, Oregon 97132
503/554-9553 fax 503/537-9554
email: mail@hbh-consulting.com

Designed By: | Drawn By: GBB | Checked By: DP | Submittal No:
File:

REV.	DATE	DESCRIPTION	BY

0 1"
IF THIS LINE IS NOT 1 INCH
SCALE IS NOT AS SHOWN

WDY
Structural - Civil Engineers
6443 SW Beaverton-Hillsdale Hwy, suite 210 Portland, OR 97221 ph:503.203.8111 fx:503.203.8122 www.wdyi.com

©2022 WDY, INC.

LINCOLN CITY
801 SW HIGHWAY 101, LINCOLN CITY, OR 97367

19TH AND LEE ST PUMP STATION
LINCOLN CITY, OR

ROOF FRAMING PLAN

Date: 3/14/2022
Sheet No. S4
of

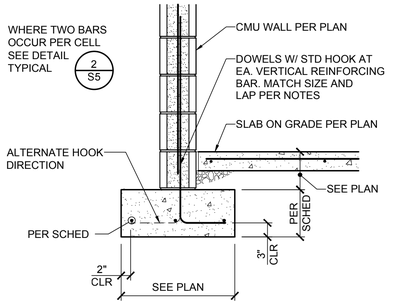

1/S5 3/4" = 1'-0"

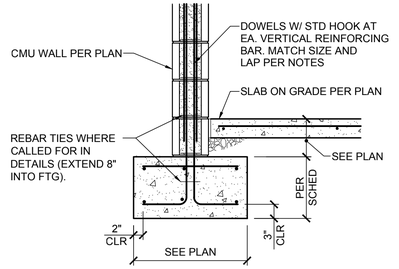

2/S5 3/4" = 1'-0"

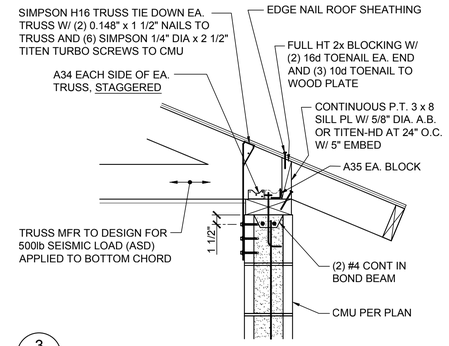

3/S5 1" = 1'-0"

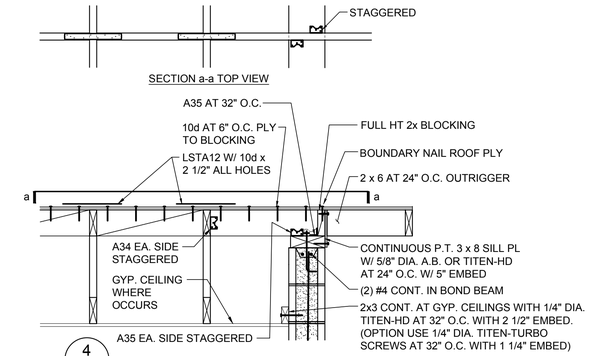

4/S5 3/4" = 1'-0"

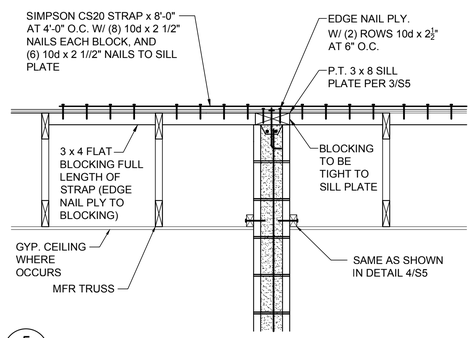

5/S5 3/4" = 1'-0"

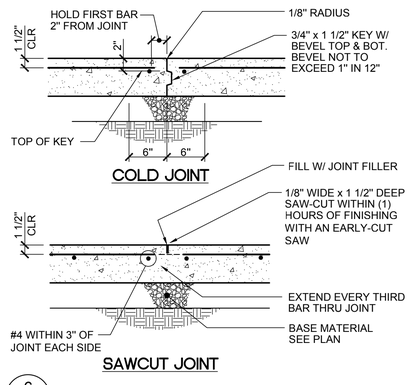

6/S5 1" = 1'-0"

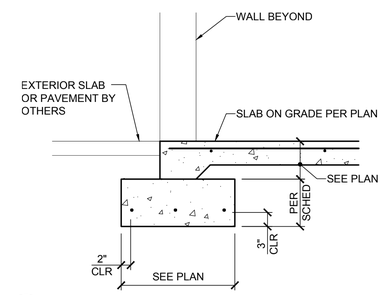

7/S5 3/4" = 1'-0"

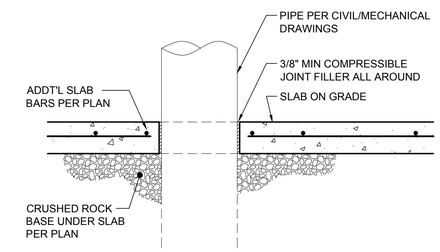

8/S5 PIPE PENETRATION AT SLAB ON GRADE
N.T.S

STRUCTURAL REGISTERED PROFESSIONAL ENGINEER 17895 OREGON JULY 25, 1985 DOUGLAS E. PAOLA
RENEWS: 12-31-2022

HBH CONSULTING ENGINEERS
501 E First Street
Newberg, Oregon 97132
503/554-9553 fax 503/537-9554
email: mail@hbh-consulting.com

Designed By: | Drawn By: GBB | Checked By: DP | Submittal No:
File:

REV.	DATE	DESCRIPTION	BY

0" 1"
IF THIS LINE IS NOT 1 INCH SCALE IS NOT AS SHOWN

WDY
Structural • Civil Engineers
6443 SW Beaverton-Hillsdale Hwy, suite 210 Portland, OR 97221 ph:503.203.8111 fx:503.203.8122 www.wdy.com

©2022 WDY, INC.

LINCOLN CITY
801 SW HIGHWAY 101, LINCOLN CITY, OR 97367

19TH AND LEE ST PUMP STATION
LINCOLN CITY, OR

DETAILS

Date 3/14/2022 | Sheet No. S5 OF

Conditional Use Permit
Staff Report for Planning Commission Public Hearing on July 5, 2022
Case File CUP 2022-04

Date:	June 21, 2022
Case File:	CUP 2022-04 SE Lee Pump Station
Property Owner:	City of Lincoln City
Situs Address:	2010 SE Lee Ave
Location:	East side of SE Lee Ave, approximately 200 feet south of SE 19th St
Tax Map and Lot:	07-11-22-AD-00100-00
Comprehensive Plan Designation:	High-Density Residential District (R-M)
Zoning District:	Multiple-Unit Residential (R-M) Zone
Site Size:	1.64 acres
Proposal:	Request to approve a conditional use permit for a pump station as part of Lincoln City's public water infrastructure system
Surrounding Land Uses and Zones:	North: Apartments; R-M South: Church, Head Start; R-M East: Houses, undeveloped land; R-1-7.5, Lincoln County West: Apartments; R-M
Authority:	Lincoln City Municipal Code (LCMC) 17.76.020 states that all land use applications and approvals shall be decided by using Type I, II, III, or IV procedures. The procedure types govern the decision-making process for that application. Table 17.76.020-1 in LCMC Chapter 17.76 lists a conditional use permit as a Type III procedure with the Planning Commission as the review authority.
Procedure:	The application was received on May 5, 2022. The application was deemed complete on May 9, 2022. On May 16, 2022, pursuant to LCMC 17.76.050.E, the Planning and Community Development Department mailed a notice of public hearing to property owners within 250 feet of the subject property. The *News Guard* published the public hearing notice on May 24, 2022.
Applicable Substantive Criteria:	LCMC Chapter 17.20 Multiple-Unit Residential (R-M) Zone LCMC Section 17.76.050 Type III Procedure LCMC Section 17.77.060 Conditional Use Permit

BACKGROUND

The subject property (site) is identified as Assessor's Map 07-11-22-AD-00100-00 and addressed as 2010 SE Lee Ave. The site is developed with a municipal water tank (commonly referred to as the SE Lee Reservoir). The covered 2-million-gallon reservoir was constructed in 1981. The site is secured by chain link fencing around the entire perimeter, and is screened by mature vegetation around 90% of the perimeter.

The site does not contain any bluff erosion hazards, aesthetic resource, floodway, flood hazard areas, or natural resource overlays.

Apartments and residential use are to the north of the site. Head Start is to the south of the site. East of the site is undeveloped forest land that is outside of city limits and the urban growth boundary. West of the site is SE Lee Ave and west of that is a church and residential use.

The project proposes installation of a pump station at the site, in addition to the SE Lee Reservoir. The pump station comprises a 240-square-foot pump house building, new pump and associated public water infrastructure, underground power improvements to serve the pump house building, and miscellaneous site improvements. The construction of the new pump house building and accoutrements will replace an existing pump station located at the corner of SE 15th St and SE Oar Ave. The applicant's narrative states that the SE Oar pump station is "at the tail-end of its life; the automatic transfer frequently fails to function during power outages, the mechanical equipment requires frequent maintenance, and the pump is undersized to serve full build out of the partially-developed Delake Heights Subdivision. The current pump is located in the center of the SE 15th street [sic] right-of-way. This prevents access development for the undeveloped lots off SE 15th street [sic] and the eventual through street development to SE 19th outlined in Lincoln City's Transportation System Plan."

COMMENTS

Comments were received from Don Kaizen, via email, on May 23, 2022. Mr. Kaizen expresses concerns with noise and potential fugitive dust during the construction process. Mr. Kaizen requests preparation of a work plan detailing a methodology for measuring noise and dust by which the contractors must abide.

Comments were received from North Lincoln Fire & Rescue District #1, via email, on May 9, 2022. The comments indicate that the security fence shall have emergency services access via Knox box, Knox box key switch for electric gates, or a Knox box padlock. The commenter also stated that there isn't a fire hydrant accessible to the district for properties south of the proposed pump station, that 2019 Oregon Fire Code requires a fire hydrant within 400 feet of the two sites to the south, and that the commenter was advised that a fire hydrant would be incorporated as part of this project to serve the two sites to the south.

ANALYSIS

Chapter 17.20 Multiple-Unit Residential (R-M) Zone
17.20.050 Development standards

			Required	Provided
	Min. lot width (feet)		Not applicable	Not applicable
	Min. lot area (square feet)		None	Not applicable
	Min. density		Not applicable	Not applicable
	Max. building height			
	a.	Primary buildings	35 feet	Not applicable
	b.	Accessory buildings, structures, uses	25 feet	16 feet 11 inches

			Required	Provided
	Min. building setbacks			
	a.	Front porch	5 feet	Not applicable
	b.	Front wall	10 feet	10 feet
	c.	Side interior	10 feet	Over 10 feet
	d.	Side street	10 feet	Not applicable
	e.	Rear	15 feet	Over 15 feet
	Min. setbacks for garage/carport entrances		Not permitted	No garages/carports proposed
	Max. building coverage		45% = 71,002.8 x 45% = 31,951.26 square feet	240 square feet
	Common area		None required	None required
	Vehicle storage space		None required	None required

Finding: There are no minimum lot width, lot area, or density requirements for a conditional use permit in the R-M zone. The proposed structure is a pump house to house a water pump as accessory to the city's public water system. The structure meets or exceeds the front, interior sides, and rear setback requirements. There are no street side setbacks required because the site is not a corner lot. The structure is 16 feet 11 inches in height, which is less than the allowed maximum height of 25 feet for an accessory building. The structure is 240 square feet, which is well under the maximum allowed building coverage of 31,951.26 square feet. Common area and vehicle storage space are not required for a conditional use permit. The development standards are met or not applicable.

17.20.060 Landscaping
Landscaping shall be provided in accordance with Chapter 17.55 LCMC.

Finding: Compliance with this section is discussed later in the staff report under Chapter 17.55

17.20.070 Signs
Signs shall be allowed in accordance with Chapters 9.34 and 17.72 LCMC.

Finding: The application does not include any requests for signs.

17.20.080 Supplementary regulations and exceptions
Supplementary regulations and exceptions shall be adhered to in accordance with Chapter 17.52 LCMC.

Finding: Compliance with Chapter 17.52 is addressed later in this staff report.

17.20.090 Off-street parking and loading

Finding: Compliance with off-street parking and loading requirements is addressed later in this report under Chapter 17.56.

17.20.110 Restrictions
No development shall occur in the R-M zone unless all city services (sewer and water) are available to serve such development.

Finding: All city services are present at the site. This requirement is met.

Chapter 17.52 Supplementary Regulations and Exceptions
17.52.060 Clear-vision area requirement

A. *Requirement to Provide Clear Vision. For public safety purposes, all properties shall have triangular clear-vision areas (aka clear-vision triangles) where streets (public or private) intersect with other streets, commercial alleys and commercial driveways. Clear-vision triangles shall be also be provided for street intersections with commercial driveways as provided herein. Clear-vision areas at local intersections shall meet the requirements in this section, which are meant to be adequate to allow drivers and pedestrians who are stopped or approaching with caution to see intersecting traffic in time to avoid collisions. Clear-vision areas at intersections with Highway 101 must meet with Oregon Department of Transportation approval and comply with the requirements of this section.*

Finding: The project does not propose streets intersecting with other streets, commercial alleys, or commercial driveways. No commercial driveways are proposed. No public or private street intersections are proposed. No street intersections with commercial driveways are proposed. No intersections with Hwy 101 are proposed. The existing driveway is not considered a commercial driveway in that it is not for commercial use or use by the public. The driveway is used solely for access to the site for pump station and reservoir maintenance. The clear-vision area requirement is not applicable.

17.52.120 Utilities

B. *In all zones, all electrical, telephone and cable television utility service installations or connections made as part of new construction of a building or structure shall be placed underground in accordance with city standards.*

Finding: The project proposes new construction, so all electrical, telephone, and cable television utility service installations or connections made as part of the new construction shall be placed underground. This shall be reviewed for compliance as part of the structural permit application and construction process. This requirement is met for purposes of this application.

17.52.150 Exterior lighting.
Artificial exterior lighting shall not be designed to shine or create glares in any residential zone or residential use, adjacent dwelling unit or in a public right-of-way.

A. *Light poles must not exceed a height of 20 feet.*
B. *All lighting must be shielded to avoid glare, light pollution (night sky), and light spillover onto residential properties. Shielding must be integral to the light fixture and direct light downward.*
C. *Luminance at the property line, or no more than five feet over the property line, must be zero.*
D. *Maximum initial luminance of outdoor sales displays, outdoor storage areas, service station canopies, and similar areas must not exceed 20 foot-candles.*
E. *Maximum initial luminance of parking lots must not exceed four foot-candles.*
F. *Up-lighting is prohibited. The maximum illumination limits for wall washing are one foot-candle for dark colored surfaces and one-half foot-candle for light colored surfaces.*
G. *Pedestrian ways and building entrances not otherwise illuminated by building-mounted lights or streetlights must provide between one and two foot-candles of light from bollards, step lights, or other low-profile fixtures that are appropriate for walkways and plazas.*
H. *The manufacturer's data or measurement must demonstrate conformance with this section. Cut sheets, a photometric plan analysis, and an exterior lighting plan showing the locations, types, sizes,*

and heights of all exterior lighting fixtures shall be included with the applicable application submittal.

Finding: The only proposed exterior lighting will be that required by the Oregon building code for the pump house building. All lighting shall be LED lighting and shall comply with the luminance and down-lighting requirements of LCMC 17.52.150. This shall be reviewed for compliance as part of the structural permitting process.

17.52.170 Solid waste, garbage, trash, recycling, and composting receptacle storage areas.
All solid waste, garbage, trash, recycling, and composting receptacles shall be located within a building or within an enclosure that is at least 20 feet or more from any pedestrian space which screens the receptacle from the view of neighboring property, pedestrian space, or from right-of-way, except those receptacles associated with a detached single-unit dwelling, attached single-unit dwelling, duplex, or manufactured dwelling.

Finding: The project does not propose any solid waste, garbage, trash, recycling, or composting receptacle storage areas, nor are any needed or required. Accordingly, no screening is required. This requirement is not applicable to this application.

17.52.180 Placement and screening of mechanical equipment

A. *Any heating, air conditioning, or other mechanical equipment installed on or near a building to be used to serve the building or a function performed therein, and any propane tanks, shall be screened from the ground level view from adjacent properties, pedestrian spaces, and from public right-of-way, and shall not be located within 20 feet of pedestrian space.*
B. *Rooftop mechanical units shall not be visible from any public right-of-way and shall not exceed the allowable building height.*
C. *Ground-mounted mechanical units shall be limited to the sides or rears of buildings and screened from view from adjacent properties and from public right-of-way.*
D. *Standpipes, meters, vaults, and similar equipment shall not be placed on a front elevation when other alternative locations exist.*

Finding: The submitted materials indicate installation of mechanical equipment on the south side of the pump house building. The applicant states that "screening shall be provided in the form of landscaping within the 10 foot setback area outside of the noted fence. Landscape screening shall be provided in accordance with LCMC 17.55.080, Living Landscaping as Screening. Tentative plantings are Thuja "Green Giant" Shrub or Pacific Wax Myrtle planting. Screening from the south shall be provided by grading & existing vegetation." This requirement has been met as much as it can be and will be reviewed for ultimate compliance during the final planning inspection, which will take place as part of the structural permitting process.

17.52.220 Tree protection and removal

A. *Scope. This section applies to all trees within the city wherever located.*
B. *Purpose. This purpose statement provides a general philosophy to guide the specific enforcement and implementation of provisions and criteria in this section.*
C. *Definitions.*
D. *Tree Removal Prohibitions*
    1. *Tree removal is prohibited, except as allowed in this section. Violations of this section are enforceable as Class B violations.*
    2. *Topping is prohibited, except where necessary for utility work or public safety, in which case it requires a tree removal permit. The burden of proof is on the applicant to demonstrate…*

3. *Removal of protected trees is prohibited. Protected trees must be maintained according to applicable tree protection plans, CC&Rs (conditions, covenants and restrictions), and other recorded agreements.*
4. *Removal of trees in wetlands that fall under the jurisdiction of state or federal government removed without concurrence from those state and/or federal agencies that have jurisdiction is prohibited.*
5. *Removal of trees as part of commercial forestry operations, as described in this section, is prohibited, and commercial forestry is not permitted, except as specifically allowed by this section.*

Finding: The site does not contain any protected trees. The project does not propose any topping of trees. The site does not contain any wetlands. No commercial forestry operations are proposed as part of the project.

E. When Tree Removal Is Allowed Without a Tree Removal Permit.

1. *Generally.*
   a. *In all cases, removal of trees must be conducted in a manner consistent with LCMC 12.08.050(B), which regulates land-disturbing activities.*
   b. *Removal of trees less than six inches in diameter is permitted without a tree removal permit, unless they are protected trees.*

Finding: If the site contains any trees that are less than six inches in diameter, they may be removed without a tree removal permit.

2. *Single-Family Dwellings and Duplexes or Two-Family Dwellings, and Attached Single-Family Dwellings.*

Finding: The project is not a single-family dwelling, duplex, or attached single-family dwelling, so this is not applicable to the application.

3. *Public Utilities and Public Works.*
   a. *Removal of trees is allowed without a permit if performed by utility or city public works personnel to remove vegetation and trees that present a danger to life or property, to restore utility services, or to reopen a public thoroughfare to traffic.*
   b. *Removal of trees is allowed without a permit if performed by city public works personnel to remove trees that are deemed nuisances under Chapter 8.12 LCMC, Nuisances, or to remove trees necessary to install or maintain improvements on parklands, streets, sewers, or utility within public owned and dedicated rights-of-way or public utility easements.*

Finding: No public utilities and public works tree removal is proposed for this project.

4. *Dangerous and Nuisance Trees.*

Finding: The submitted materials do not indicate the presence of any dangerous or nuisance trees on the site.

F. When a Tree Removal Permit is Required. Except as allowed in subsection (E) of this section, no person shall engage in or cause land clearance or tree removal without first having obtained a tree removal permit issued by the city.

1. *A tree removal permit may be issued only for:*
   a. *Single-Family Dwellings, Duplexes, Two-Family Dwellings, and Attached Single-Family Dwellings.*

Finding: The project is not a single-family dwelling, duplex, or attached single-family dwelling.

b. Multifamily Dwellings, Commercial or Industrial Sites, Undeveloped

Finding: The project is not a multi-unit dwelling or commercial or industrial site. The site is developed with the SE Lee Reservoir.

c. Sites, Trees More than 100 feet from Single-Family Dwellings and Duplexes or Two-Family Dwellings, and Attached Single-Family Dwellings on the same lot. Removal of trees is allowed with a permit for the following reasons only:

i. Diseased or Dead.
ii. Solar Access.
iii. Surveyor Access.
iv. Spread of Disease, Insects and Threat of Natural Hazard.
v. Selective Thinning on Open Space and Park Zoned Land.
vi. Development. Removal of tree(s) for the placement of structures and other improvements, in accordance with subsection (F)(9) of this section and provided:
(A) The city has approved a site plan, subdivision, planned unit development or building permit; and
(B) The city has approved a tree protection plan, if required by subsection (H) of this section.

Finding: The tree removal permit is required for development on the site. Removal of trees for the placement of structures and other improvements is allowed on a site with a tree removal permit. The project proposes the placement of a pump house building and accompanying improvements and requests permission to remove up to 30 trees to accomplish the development. The building permit will be requested once conditional use approval has been received.

2. Conditions. The city may place conditions on any tree removal permit as appropriate…
3. Review Process. If part of a project that requires subdivision review, site plan review, or a conditional use permit, the permit for tree removal shall be processed as part of development or conditional use permit review. Other tree removal applications shall be reviewed by the director…
4. Fee. The city council may adopt by resolution a fee to cover the actual or average costs of…

Finding: No fee has been established by resolution for a tree removal permit.

5. Authority. The city manager or the city manager's designee, including the director of planning and community development in the case of development approval, or the public works director in the case of a public works permit, is authorized to issue, extend, enforce, and revoke a tree removal permit.

Finding: The planning and community development director will give ultimate approval of the tree removal permit in conjunction with reviewing the building permit application.

6. Permit Notice and Appeal.
a. The city shall provide notice of decision or hearing in conjunction with the required notice for subdivision, partition, site development review, planned development or conditional use and in accordance with Chapter 17.76 LCMC, Procedures. Notice shall not be required for other tree removal permits.
b. Appeals of a tree removal permit shall be as provided…

Finding: The required notice of the public hearing was mailed to property owners within 250 feet of the site, pursuant to Chapter 17.76.

7. *Display of Permit.*

Finding: The tree removal permit is part of the building permit and will be displayed on the site throughout construction.

8. *Duration. A tree removal permit shall be effective for 18 months from the date of approval. Upon written request…*

Finding: The applicant intends to begin construction immediately following approvals.

9. *Tree Removal for Development. Removal of tree(s) for the placement of structures and other improvements shall comply with the following:*
   a. *Timing of Permit issuance.*
      i. *Building. A permit for tree removal from individual building lots shall be issued in conjunction with, and not prior to, issuance of the building permit.*

Finding: The tree removal permit will be issued by the City in conjunction with issuance of the building permit.

      ii. *Infrastructure. A tree removal permit may not be issued under this subsection for removal for installation of street, gutter, curb, sidewalk, sanitary sewer, storm sewer, and water system improvements until the city engineer has given final approval to the design of the improvements…*
      iii. *Phased Developments. For phased developments, a separate tree…*

Finding: The project will be completed in one phase, so this standard is not applicable to this application.

   b. *Tree removal shall conform to the approved tree protection and replacement plan, if required by subsection (H) of this section, and to subsection (I) of this section, Tree Protection and Replacement Plan Required.*
   c. *Revegetation. Immediately following completion of the improvements, areas disturbed by tree removal shall be revegetated in accordance with the requirements of LCMC 17.52.100(F), (G), (H), and (I).*

G. *Replacement of Trees Lawfully Removed.*
   1. *Applicability. The standards of this section apply to trees removed with a permit required by subsection (F) of this section that are more than 100 feet from a building subject to development plan review, or conditional use approval, or that are removed to allow development…*

Finding: The trees proposed for removal are within 100 feet of the pump house building. Accordingly, replacement is not required.

H. *Design Modifications for Tree Retention – Design Modifications of Public Improvements.*

Finding: No design modification for tree retention are proposed.

I. *Tree Protection and Replacement Plan Required.*
   1. *Applicability. Requirements of this subsection apply to any lot, parcel or combination of lots or parcels for which an application for a subdivision, site plan review, planned unit development or conditional use is filed if the proposed project will involve tree removal.*
   2. *Elements of a Tree Protection Plan.*

3. *Recording of Tree Protection Plan. Approved tree protection plans shall be recorded, either separately or included in development agreements required in LCMC Titles 16 and 17 for planned unit developments (PUDs) and subdivisions.*

Finding: This is a conditional use, so the tree protection plan is required. The submitted materials included a topographic survey and tree survey. The plan notes existing trees, proposed trees for removal, proposed trees for preservation, location, size, and species of trees to be preserved. The trees to be removed are marked on the plans and will be flagged on the site prior to construction. The applicant's narrative states that the required tree protection fencing will be placed on the site prior to construction. The project is not a PUD or a subdivision, so recording a tree protection plan is not required.

17.52.230 Public infrastructure improvements

A. *Infrastructure Easement and Improvement Requirements. The issuance of a structural permit for the addition, alteration, or repair, within any 12-month period, exceeding 50 percent of the assessed value of an existing building or structure, or for a new building or structure in connection with any permitted or conditional use within any zone as described in this title, or of a development review approval for development for which development review is required under LCMC 17.77.070, shall be subject to the following requirements:*

Finding: The project involves construction of a new structure in connection with a conditional use, so public infrastructure improvements are required. However, the site is adjacent to a fully improved street that contains sidewalk, curb, and paving. The applicant's narrative notes that the existing driveway apron does not meet the standards of the Americans with Disabilities Act and will be reconstructed as part of the project to reach compliance. The site contains existing city water and sewer services. The applicant's narrative states the following: "Drainage accommodations are being made at the back of sidewalk to direct site drainage into the city storm system. This includes a grass lined drainage swale for conveyance & water quality function. Water & sewer services are existing to the site. Additional connections are being completed to connect the proposed infrastructure upgrades to the existing system. Underground power utilities are being extended to serve the development per the submitted plans. No existing overhead utilities exist to the site." It is clear from the applicant's submitted materials that any improvements that are needed will be constructed. However, most of the public infrastructure improvements that would be required already exist.

17.52.300 Traffic impact study (TIS) requirements
A TIS shall accompany a land use application at the request of the city engineer, if the proposal involves one or more of the following:

1. *An amendment to the Lincoln City comprehensive plan or zoning map;*
2. *A new direct property approach road to US 101;*
3. *Likely generation of 50 or more p.m. peak-hour trips on US 101, or 100 or more p.m. peak-hour trips on the local transportation system, according to the Institute of Transportation Engineers (ITE) Trip Generation Manual;*
4. *If use on any street or direct property approach road intersecting with US 101 increases by 10 vehicles or more per day that exceed 20,000 pounds gross vehicle weight;*
5. *An existing or proposed access driveway that does not meet minimum spacing or sight distance requirements, or a driveway located where vehicles entering or leaving the property are restricted, or such vehicles are likely to queue or hesitate at an approach or access connection, thereby creating a safety hazard; or*
6. *A change in internal traffic patterns that may cause safety problems, such as back-up onto the highway or traffic crashes in the approach area.*

Finding: The project is not an amendment to the comprehensive plan or the zoning map. The project does not propose a new direct property approach to Hwy 101. The project will not generate 50 or more p.m. peak-hour trips on Hwy 101. The use will not generate 10 vehicles or more per day that exceed 20,000 pounds gross vehicle weight. The project meets the minimum spacing and sight distance requirements. There will be no changes in internal traffic patterns that may cause safety problems. The city engineer did not request a TIS for the project. A TIS is not required for this project.

Chapter 17.55 Landscaping
17.55.040 Landscaping requirements for all development other than detached single-unit dwellings, attached single-unit dwellings, manufactured dwellings, and duplexes.

A. *Landscaping is required on all portions of the site not covered by buildings, structures, or impervious surfaces.*

Finding: The submitted plans show and the applicant's narrative states that the site is fully landscaped on all portions not covered by impervious surfaces or structures.

B. *Fifteen percent of the total gross area of the site shall be landscaped with live vegetation according to the standards contained within this chapter. Existing plants and trees that are healthy and noninvasive count towards the 15 percent live vegetation requirement, provided they will be protected during development adequately enough to ensure future preservation.*

Finding: The total site area is 1.64 acres, which equates to 71,438.4 square feet. 15% of 71,438.4 equals 10,715.76 square feet. The applicant's narrative states that 4,550 square feet of the site is existing or proposed impervious surface area from structures or paving. The remaining square footage of the site is landscaped with native, mature vegetation. The existing vegetation will be preserved, except those portions that will be removed to accommodate installation of the new pump house building. Disturbed areas not covered with impervious surfaces will be landscaped again. This requirement is met and exceeded.

1. *At a minimum, the site shall contain three distinct and separate landscape area, containing an overall total of the following spaced and/or grouped according to best planting practices and aesthetics:*
   a. *One tree per 20 feet of total lot perimeter; and*
   b. *One shrub per 10 feet of total lot perimeter; and*
   c. *Living ground cover.*

Finding: The total lot perimeter is 1,111 feet, which equates to a requirement of 56 trees, 112 shrubs, and 7,088 square feet of living ground cover. The site currently contains 75 trees and over 112 shrubs. The remainder of the site that is not covered with impervious surfaces contains native vegetation. The applicant's narrative provides two different numbers for tree removal – at the beginning of the narrative it states that 25 trees will be removed, but on page 10 of the narrative it states that 30 trees will be removed. Sheet C-3 of the submitted plan set shows that 30 trees will be removed. Removal of 30 trees will leave 45 trees on the site. Removal of 25 trees will leave 50 trees on the site. Compliance with landscaping standards will be reviewed during the structural permitting and inspection process.

2. *If islands are required in parking areas, each island must contain at least one tree, sized appropriately for the area of the island. The remainder of the island must be covered with shrubs and/or living or nonliving ground cover, subject to the standards set out in subsection (C) of this section and LCMC 17.55.050. Islands count towards both the parking landscaping requirement and the 15-percent landscaping requirement.*

Finding: Islands are not required for this project, so this requirement is not applicable.

C. Ground Cover and Mulch

1. *Ground cover used as mulch between plantings shall be placed at a minimum two- to three-inch-thick layer to ensure effective erosion control and to avoid leaching of excessive nutrients*
2. *Acceptable mulch materials are straw, well-aged compost and leaves, wood mulch or bark dust, or wood nuggets that are a minimum diameter of one inch. Mulching with manure that has not been composted or aged is prohibited.*
3. *Nonliving ground cover materials such as noncompacted pea gravel, river rock, pumice, stones, boulders, bark dust, and cedar chips are acceptable ground cover.*
4. *Standards for living ground cover are those set out in LCMC 17.55.050.*

Finding: The applicant's narrative states that bare soils will either be seeded or covered with a landscaping material listed above. This requirement is met to the extent possible for purposes of this application. Confirmation of ultimate compliance with Chapter 17.55 will take place during the final planning inspection as part of the structural permitting process.

17.55.050 Selection, preparation, and installation for all landscaping

A. Selection of Materials

1. *Invasive and noxious plants as defined in LCMC 8.12.010 or by the Oregon Department of Agriculture are prohibited.*

Finding: The submitted materials do not show the planting of any invasive or noxious plants, and the applicant's narrative states that no invasive or noxious species are to be installed. This requirement is met to the extent possible for purposes of this application. Confirmation of ultimate compliance with Chapter 17.55 will take place during the final planning inspection as part of the structural permitting process.

2. *Hydro-seeding is prohibited.*

Finding: The applicant's narrative states that all seeding shall be completed by hand. This requirement is met to the extent possible for purposes of this application. Confirmation of ultimate compliance with Chapter 17.55 will take place during the final planning inspection as part of the structural permitting process.

3. *All selections must be healthy at the time of planting.*

Finding: The applicant must ensure that the landscape contractor selects healthy vegetation for planting. Confirmation of ultimate compliance with Chapter 17.55 will take place during the final planning inspection as part of the structural permitting process.

4. *Sizes of Plantings.*
   a. *Deciduous trees must be a minimum of one and one-half caliper inches at the time of planting.*
   b. *Conifer trees must be a minimum of five feet in height at the time of planting.*
   c. *Ground cover plants must be at least four-inch pot size.*
   d. *Shrubs must be at least three-gallon size at the time of planting, unless three-gallon sizes are not available for purchase at the time of planting for the particular shrub selected. In those instances, one- or two-gallon size is allowed.*
   e. *Plantings at their mature height shall not be higher than five feet if they would block the view of any shoreline of the Pacific Ocean, Siletz Bay or Devils Lake.*
   f. *All plantings must be one, or a combination of, the following: native to the Pacific Northwest; selected from the City of Lincoln City Guide to Landscape Selections; or suitable for the site*

conditions as certified by a written and signed statement from a landscape architect licensed in the state or Oregon or a landscape nursery person.

Finding: The applicant's narrative indicates that all new planting will meet the requirements of Chapter 17.55. Confirmation of ultimate compliance with Chapter 17.55 will take place during the final planning inspection as part of the structural permitting process.

17.55.060 Irrigation and maintenance

A. *Irrigation. The intent is to ensure that plants will survive the critical establishment period when they are most vulnerable due to lack of watering. Irrigation systems shall be provided for all planted areas for a period of at least two years, or until it is demonstrated that new plants have become naturalized.*

Finding: The majority of the site's landscaping is established. The applicant's narrative does not provide information regarding irrigation for establishing the proposed vegetation. As a condition of approval, the method of irrigation for establishing the proposed vegetation shall be indicated in the plans submitted with the structural permit application.

17.55.070 Clear-vision requirements.
Landscaping shall be in conformance with the clear-vision area requirements set out in LCMC 17.52.060.

Finding: The submitted plans show that the clear-vision areas do not contain any proposed vegetation that will violate the rules for clear vision. Confirmation of ultimate compliance with Chapter 17.55 will take place during the final planning inspection as part of the structural permitting process.

17.55.080 Living landscaping as screening

A. *When screening is required, the applicant may choose to use vegetation as the screening method. If so, the following standards must be met:*

    1. *Screening shall be in the form of a hedge.*
    2. *The hedge shall consist of evergreen shrubs and shall be native to the Pacific Northwest and suitable for the site conditions as certified by a nursery person or a landscape architect licensed in the state of Oregon or selected from the City of Lincoln City Guide to Landscape Selections.*
    3. *Selected shrubs must have a mature height of at least six feet.*
    4. *Shrubs must be of sufficient size and number to provide solid sight obstruction, at a minimum of six feet in height, at the time of planting.*

Finding: No living landscaping as screening is proposed. The site in its present state has mature vegetative screening on the north, east, and south boundaries. Pursuant to security rules from the United States Department of Homeland Security, screening from the public right-of-way along the west boundary is prohibited.

Chapter 17.56 Off-street Parking and Loading Regulations

Finding: No off-street parking, loading spaces or bicycle parking spaces are required for construction of a pump house.

Chapter 17.74 Design Standards

Finding: The site is in the R-M zone and the project proposes construction of a building, so the provisions of Chapter 17.74 are applicable. However, the site and use are not commercial, residential, or intended for use

by the public or pedestrians. The site is intended to be secure for protection of City infrastructure. A locked, pedestrian door will be provided with pedestrian access to the existing sidewalk. Screening is provided in the form of existing mature vegetation on the north, south, and east property lines. The west property line is being partially screened by fencing and the new building. The site must remain visible from public right-of-way to ensure that security requirements for Low to Medium Security Sites are met, per United States Department of Homeland Security. These requirements preclude development of pedestrian space and pedestrian shelters. The building's wall planes facing the right-of-way are less than 800 square feet. The applicant's narrative states the following: "The building is an accessory use to the primary, water reservoir use of the property, and is cohesive with Lincoln City's other pump station building design. This construction & use falls outside of the above "Intent" section of the Building Design standards; Outside of the base development standards (including building height & setbacks) the remaining building design standards, subsections D through K, have not been included in the narrative."

Staff concurs with the applicant's assessment. The intent of the building design standards is to reflect the following community values: context-sensitive and eclectic coastal architecture; articulated building facades to break up large volumes and promote human scale; contextually appropriate materials, textures, and colors; pedestrian-scale development through ground floors made active with windows, pedestrian amenities, and furnishings; and corner buildings that serve as focal points with vertical building elements, furnishings, and/or public art. Again, this site and the pump house building are not for public use and do not want to invite the public or provide pedestrian-scale friendliness, use, or scale. Accordingly, the building design standards are simply not applicable to this project.

Chapter 17.76 Procedures
17.76.050 Type III procedure

- *A. General Description. Type III procedures apply to quasi-judicial permits and applications. Decisions on quasi-judicial permits and applications are made by either the planning commission or city council, and require substantial exercise of discretion and judgment in applying approval criteria. Type III procedures require public notice and one or more public hearings.*
- *B. When Applicable. Table 17.76.020-1 identifies Type III applications. Applications not listed in Table 17.76.020-1 may be identified as Type III by the director based on the general description in this section.*
- *C. Pre-Application Conference. A pre-application conference is not required prior to application submittal of a Type III application, but is strongly encouraged. Guidelines for pre-application conferences are set forth in LCMC 17.76.090.*
- *D. Application Requirements. Type III applications shall:*
  - *1. Be submitted on application forms provided by the department and shall include all information, exhibits, plans, reports, and signatures requested on the application forms.*
  - *2. Be accompanied by the required fee as adopted by city council resolution.*
  - *3. Be subject to the completeness review procedure set forth in LCMC 17.76.110(D) and (E).*

Finding: The required application forms and materials were submitted, along with the required fee. The application was deemed complete in accordance with LCMC 17.76.110.D and E.

- *E. Notice of Public Hearing.*
  - *1. After a Type III application has been accepted as completed under LCMC 17.76.110(E), the department shall mail a written public notice to the following:*
    - *a. The applicant and applicant's representative;*
    - *b. Owner of record of the subject property;*
    - *c. Property owners of record within 250 feet of the perimeter property line of the property or properties subject to the application, using the most recently provided property tax*

assessment roll of the Lincoln County assessor's office as provided to the city to determine property owners of record; and

d. Any neighborhood or community organization or association recognized by the governing body and whose boundaries include the site.

e. At the discretion of the application, the department also shall provide notice to the Oregon Department of Land Conservation and Development.

Finding: The Planning and Community Development Department mailed the notice of a public hearing to the parties noted in LCMC 17.76.050.E.1.a through e.

2. The notice of public hearing shall include the following:

a. A brief description of the request;

b. A list of the applicable criteria from the ordinance and the comprehensive plan that apply to the application at issue;

c. The street address or other easily understood geographical reference to the subject property;

d. The date, time, and location of the hearing;

e. A statement that failure of an issue to be raised in a hearing, in person or by letter, or failure to provide statements or evidence sufficient to afford the decision maker an opportunity to respond to the issue precludes appeal to the Board based on that issue;

f. The name of a department staff member to contact and the telephone number where additional information may be obtained;

g. A statement that a copy of the application, all documents and evidence submitted by or on behalf of the applicant, and applicable criteria are available for inspection at no cost and will be provided at reasonable cost;

h. A statement that a copy of the staff report will be available for inspection at no cost at least seven days prior to the hearing and will be provided at reasonable cost; and

i. A general explanation of the requirements for submission of testimony and the procedure for conduct of hearings.

3. The failure of a property owner to receive notice does not invalidate the land use action if the notice was sent.

Finding: The public notice of hearing contained all the information required in LCMC 17.76.050.E.2.a through i.

F. Public notices for Type III applications shall be mailed a minimum of 20 days prior to the first evidentiary public hearing.

Finding: The public hearing date is July 5, 2022. The public notice was mailed on May 16, 2022.

Chapter 17.77 Applications
17.77.060 Conditional use permit

A. Purpose. In all zones, conditional uses listed in that zone may be permitted subject to the granting of a conditional use permit. Because of their unusual characteristics, or the special characteristics of the area in which they are to be located, conditional uses require special consideration so that they may be properly located with respect to the objectives of this title and their effect on surrounding properties.

B. Procedure. Conditional use permit requests are subject to the Type III procedure, as described in LCMC 17.76.050.

C. Submittal Requirements.

1. *Type III application submittal requirements are set forth in LCMC 17.76.050. Specific submittal requirements are provided on application forms and checklists as authorized in LCMC 17.76.110.*

Finding: The required documents were submitted.

2. *At a minimum, an application for a conditional use shall include the following:*
   a. *An application form signed by the applicant and every current property owner of record as shown on the most current recorded deed;*
   b. *Full payment of the application fee, based on the fee schedule in effect on the date of submittal;*
   c. *Existing conditions plan;*
   d. *Site plan;*
   e. *Landscape plan;*
   f. *Building elevations (for new construction);*
   g. *Phasing plan (if phasing is proposed);*
   h. *Traffic impact study pursuant to LCMC 17.52.300; and*
   i. *Narrative addressing compliance with each criterion and applicable standard.*

Finding: The completed and signed application form was submitted. The submitted materials also included an existing conditions plan, site/landscape plan, building elevations, and narrative. No phasing is proposed, and a traffic impact study is not required.

D. *Approval Criteria. In order to grant any conditional use, the planning commission must find, based upon evidence, both factual and supportive, provided by the applicant, that:*

1. *The proposal is in compliance with the comprehensive plan;*

Finding: The City of Lincoln City requests conditional use permit approval to complete a pump station upgrade by replacing the failing pump station at SE Oar with the proposed new pump station at SE Lee Ave. As detailed earlier in this report, the submitted materials either show compliance or can show compliance with conditions of approval with the applicable portions of LCMC Title 17, which is the zoning code. The zoning code enacts the comprehensive plan, so with compliance with LCMC Title 17 there is compliance with the comprehensive plan.

The City Council of Lincoln City adopted the Lincoln City Comprehensive Plan and its implementation measure, the Lincoln City Zoning Ordinance, after public hearing and has reviewed it on a periodic cycle to take into account changing public policies and circumstances. The city provided opportunities for review and comment by citizens and affected governmental units during preparation, review, and revision. Review of the proposal is in accordance with applicable zoning ordinance provisions. Accordingly, the request is in conformance with the planning goal.

The city has developed a citizen involvement program. In addition, the public hearing process, with notice to the public and review of the request by the Planning Commission (a citizen board) establishes conformance with the citizen involvement goal.

The site is a developed site that already utilizes city water and city sanitary sewer services. The project is in keeping with the objectives of Lincoln City's water master plan, which has been adopted as part of the comprehensive plan. The site is served by Lincoln City Police and North Lincoln Fire & Rescue District #1. Compliance with the current Oregon Fire Code is ensured through the structural permitting process. As presented and with conditions, the project conforms to the public facilities and services goal.

The urbanization goal is not applicable since the site is already within city limits. The natural hazard goal is not applicable to the site since it does not contain any bluff hazard erosion zones, floodway, or flood hazard areas.

The housing goal is to provide for the housing needs of all citizens. The site is in the R-M zone and is not providing housing, but it is providing water for existing houses in the city and providing water services for new housing in the city. In this way, the project is consistent with the housing goal or the housing goal is not applicable.

The economy goal is either not applicable or is met. The project is not commercial, but construction of the project will require workers so jobs will be provided in the project's development. Additionally, structural permit fees will be assessed and collected.

The project must comply with the landscaping standards and design standards. Applicability of and compliance with these standards ensures an aesthetically-pleasing development. The aesthetics goal is met through adherence to LCMC Title 17.

The site is accessed from SE Lee Ave, which is an existing street. No new streets are proposed. The site's SE Lee Ave frontage is already improved. The existing drive apron will be upgraded to meet current standards. The project does not propose any use or activity that will increase traffic or invoke a need for additional streets in the city. The transportation goal is met.

Design and construction of the structure must be in compliance with the state-adopted energy requirements. The energy goal is met.

The site does not contain any natural resources or natural hazards. The project only proposes construction of a pump house building and accompanying improvements. The environmental goal is not applicable.

The shoreland, beaches, dunes, estuary, and ocean resources goal is not applicable to this site since the site does not contain shoreland, beaches, dunes, or any estuary.

Criterion 1 is met.

2. *The site for the proposed use is adequate in size and shape to accommodate the use and all required setbacks, common spaces, retaining walls, parking and loading areas, landscaping, and other features required by this title;*

Finding: The submitted site plan shows the proposed building outside of the required setback areas. The submitted materials indicate all landscaping requirements of Chapter 17.55 either have been or will be met. The project does not require common spaces, retaining walls, or parking and loading areas. The submitted materials show that all other features that are required are being provided, as addressed throughout this staff report.

Criterion 2 is met.

3. *The site for the proposed use relates to streets and highways adequate in width and degree of improvement to handle the quantity and kind of vehicular traffic that would be generated by the proposed use;*

Finding: The site is accessed from the existing and improved SE Lee Ave. No street frontage improvements are required to the site's existing improved street frontage. No new streets are required for the project. The

project, once completed, will not generate any additional traffic since the use is not commercial, residential, or open to the public. The project does not reach the threshold of requiring a traffic impact study.

Criterion 3 is met.

4. *The proposed use will have minimal adverse impact upon adjoining properties and the improvements thereon. In making this determination, the review authority shall consider, but not be limited to, the proposed location of the improvements on the site, vehicular egress/ingress and internal circulation, pedestrian access, setbacks, height and mass of buildings, retaining walls, fences, landscaping, screening, exterior lighting, and signage;*

Finding: The site exists as a developed site containing the SE Lee Reservoir. The site contains existing mature trees and vegetation, which serves as a barrier and screening. Additional screening is not allowed due to security requirements of United States Department of Homeland Security. As presented, the project meets applicable code requirements as detailed throughout this staff report. The project is not a commercial, industrial, residential, or public project. Access to the site is limited to authorized city employees. It is highly unlikely that, once construction is completed, there will be any impact to any of the adjoining properties. The only adverse impacts expected will be minimal and will be limited to the time of construction. This impact will be mitigated with strict adherence to the city's rules for contractors and construction projects, including dust control, erosion control, and noise.

Criterion 4 is met.

5. *In areas designated as requiring preservation of historic, scenic or cultural attributes, proposed structures will be of a design complementary to the surrounding area.*

Finding: The site does not have any historic, scenic, or cultural attributes, so this requirement is not applicable. Criterion 5 is not applicable.

E. *Conditions of Approval. Pursuant to LCMC 17.76.120, the planning commission may impose, in addition to regulations and standards expressly specified in this title, other conditions found necessary to protect the best interests of the surrounding properties or neighborhood, or the city as a whole. These conditions may include, but not be limited to, the following:*
   1. *Increasing required lot size, setbacks, common open spaces, or screening and buffering areas;*
   2. *Requiring fences, screening walls, landscaping, or screening/buffering where necessary to reduce noise and glare from the use and maintain the property in a character in keeping with the surrounding area;*
   3. *Requiring landscaping and maintenance thereof;*
   4. *Increasing street widths and/or controlling the location and number of vehicular access points to the property for ingress/egress;*
   5. *Requiring means of pedestrian/bicycle pathways to serve the property;*
   6. *Increasing the number of off-street parking and loading spaces required; surfacing and proper drainage of parking area;*
   7. *Limiting size, location, and number of signs;*
   8. *Limiting the location, coverage, or height of buildings because of obstruction to view and reduction of light and air to adjacent properties;*
   9. *Limiting or prohibiting openings in sides of buildings or structures;*
   10. *Enclosure of outdoor storage areas and limitation of…*
   11. *Requiring maintenance o grounds;*
   12. *Regulation of noise, vibration, odors, etc.;*
   13. *Regulation of time for certain activities;*
   14. *Establishing a time period within which the proposed use shall be developed;*

15. *The requirement of a bond for removal of such use within a specified period of time;*
16. *Increase the size, type, or capacity of any or all utility services, facilities, or appurtenances;*
17. *Requirements under which any future enlargement or alteration of the use…*
18. *Requirements for providing the city a performance bond with a contractual agreement to assure its share of the development of streets, curbs, gutters,…*
19. *Any such other conditions that will make possible the development of the city in an orderly and efficient manner and in conformity with the intent and purposes set forth in this title and the comprehensive plan.*

Finding: Staff's recommended conditions of approval are included at the end of the staff report.

Chapter 17.77 Applications
17.77.070 Development review

A. *The purpose of development review is to establish a coordinated process to ensure that new development is in compliance with the requirements of this title prior to the submittal of structural permit applications, or in instances where structural permit application are not necessary prior to the commencement of any development. The development review application shall demonstrate that the proposed development will comply with all of the applicable requirements of this title, and that…*
B. *Applicability. Except as exempted in subsection (C) of this section, development review approval is required before any structural permit is issued authorizing development and before any outdoor storage area or parking lot development commences in the R-M, PC, RC, GC, PI, M-W, P, OS, TVC, NP, and OP zones, and before any nonresidential structural permit is issued authorizing development and before any nonresidential outdoor storage area or parking lot development commences in any other zone.*
C. *Exemptions. The activities, development and construction projects listed below are exempt from development review:*
    6. *Construction, alteration, or maintenance of public infrastructure including streets, traffic control devices, drainage ways, sanitary and storm sewers, storm water quality facilities, water lines, electrical power or gas distribution lines, or telephone or television cable systems;*

Finding: The proposed project is construction of a pump station building as part of water public infrastructure. Accordingly, the project is exempt from development review.

RECOMMENDATION

Staff recommends that the Planning Commission hold a public hearing on the proposed conditional use, take public testimony, close the public hearing, and deliberate. Should the Planning Commission determine that the request complies with the criteria with conditions, staff suggests the following conditions of approval:

General

1. The applicant/property owner/developer shall be responsible for full compliance with all applicable city, state, and federal codes, rules, regulations, and standards.

Planning

1. As part of the structural permitting process, compliance with applicable portions of Chapters 17.52 and 17.55 shall be completed prior to Planning's final inspection of the site.

Fire

1. Security fence shall have access provided for firefighter emergency response via Knox Box key switch for electric gates or Knox Box padlock.

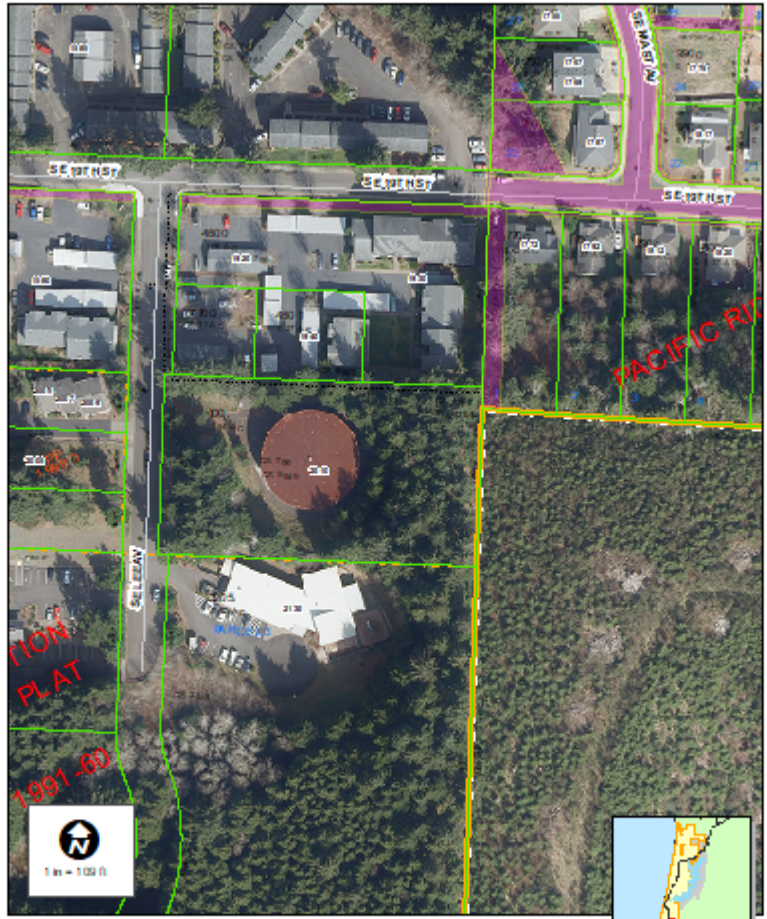

Vicinity Map

Date: 8/23/2022

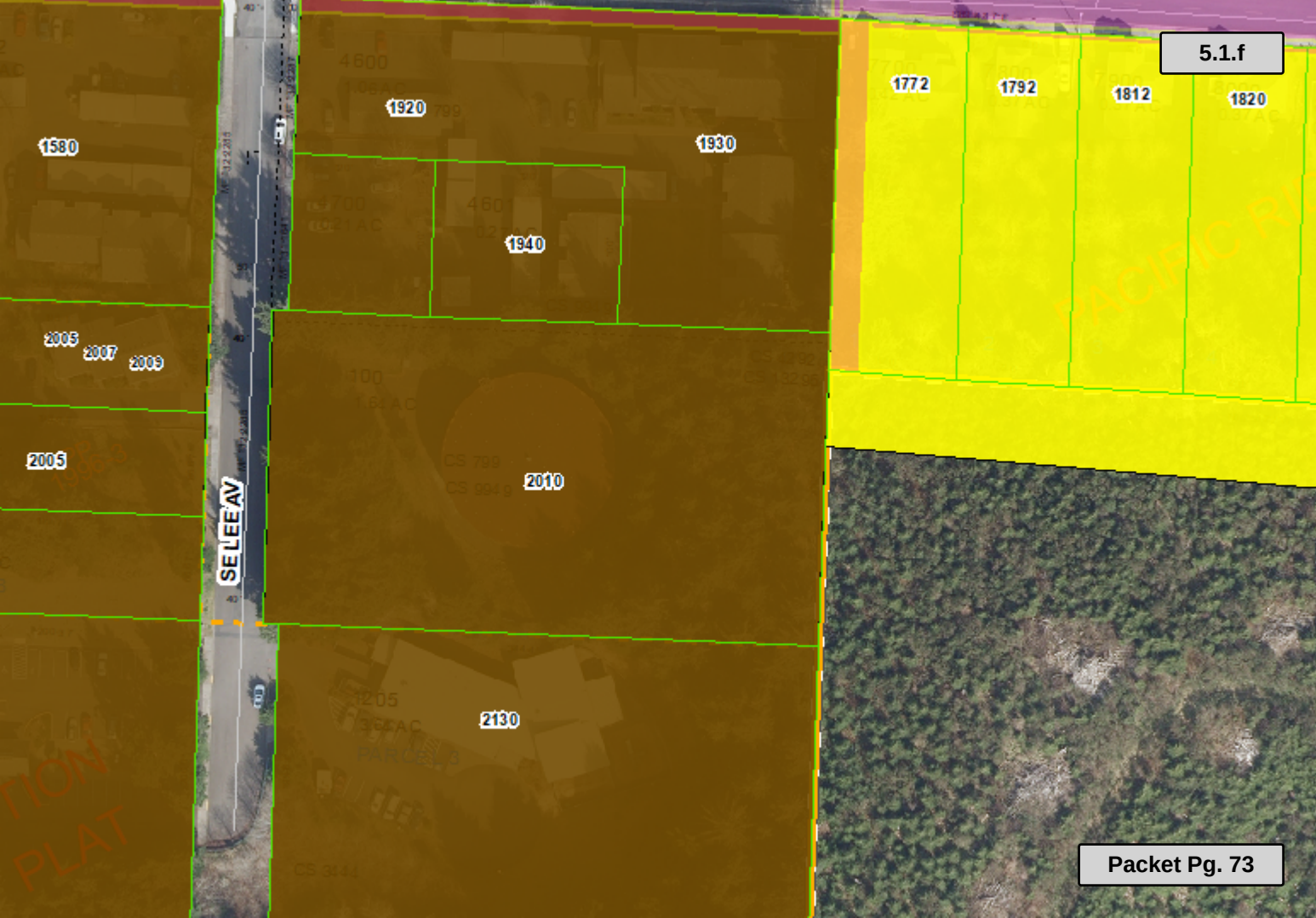
1580
1920
1930
1940
1772
1792
1812
1820
2005
2007
2009
2005
2010
SE LEE AV
2130
PACIFIC RI
TION
PLAT

Planning Commission Communication

EXT 2022-01 The Cove

Meeting Date:	July 5, 2022	Primary Staff Contact:	AnneMarie Skinner
Department:	Planning Commission	E-Mail:	ASkinner@lincolncity.org
Secondary Dept:		Secondary Contacts:	
Approval:		Estimated Time:	

Attachments:

EXT 2022-01 Application_Redacted (PDF)
EXT 2022-01 Staff Report (PDF)
Final Order 2020-03 (PDF)

Applicant's Consultant
Chris Goodell - AKS Engineering & Forestry, LLC
[redacted]

Time Extension Application

THIS IS PUBLIC RECORD

PROPERTY OWNER/CONTRACT PURCHASER (as listed on deed OR purchase contract):

Copy of purchase contract must be included with submittal for application to be accepted.

NAME: Nandina & Co., LLC
ADDRESS: [redacted]

PHONE: Please Contact Applicant's Consultant
E-MAIL: Please Contact Applicant's Consultant

PROPERTY OWNER/CONTRACT PURCHASER (as listed on deed OR purchase contract):

Copy of purchase must be included with submittal for application to be accepted.

NAME: Same as above
ADDRESS:

PHONE:
E-MAIL:

SITE AND PROJECT INFORMATION:

ZONING DISTRICT: R-M
TAX MAP AND LOT: 07 11 22AA Tax Lot 6800
CASE NUMBER: SUB 2020-01 and PUD 2020-01
DATE OF DECISION: October 12, 2020
EXPIRATION DATE OF DECISION: October 12, 2022

Explain why the following statement is true: *The extension is necessary because it is not practicable to begin development within the allowed time for reasons beyond the applicant's reasonable control.*

The Applicant met with City staff to discuss this project in May of 2019 and submitted a land use application to the City of Lincoln City on February 18, 2020; just a few weeks before the governor of Oregon declared a state of emergency due to the COVID-19 pandemic and issued a stay-at-home order. Believing the pandemic would be over shortly, the Applicant proceeded with the project and it was approved in October 2020.

However, at the time of the approval, there were still many COVID-19 restrictions in place and the pandemic was creating unforeseen economic impacts (business closures, market uncertainty, and supply chain issues to name a few) that were being felt throughout the state. Because of these unforeseen circumstances, the project has been delayed.

The current land use approval is valid until October 12, 2022. Pursuant to the provisions of Table 17.76.140, this application is permitted an extension for two years. Therefore, with this extension, the land use approval will remain valid until October 12, 2024.

_____ My/our initials acknowledge that the previous land use decision will not be modified in design, use, or conditions of approval.

This completed application requesting an extension of the expiration date of the above-referenced decision must be submitted prior to the decision's expiration date. One extension request may be granted for the applicable period of time as specified in LCMC Table 17.76.140-1. If granted, an extension is vested against any code changes adopted since the original decision.

I (We) hereby declare under penalty of perjury under the laws of the State of Oregon that the foregoing information is true, complete, and accurate. I (We) have read and fully understand, and agree to meet, the criteria for an extension as outlined in Lincoln City Municipal Code (LCMC) Section 17.76.140 and reflected in this application.

I (We) acknowledge that providing false information in the application shall be a violation and grounds to deny the application and void the approval.

SIGNATURES:

[redacted] 3.25.22

Property Owner/Contract Purchaser (signature required) Date

_____ _____

Property Owner/Contract Purchaser (signature required) Date

- *All property owners listed on the deed must sign the application.*
- *All contract purchasers listed on the purchase contract must sign the application.*
- *If contract purchasers are individuals other than the property owners shown on the deed, all property owners listed on the deed as well as all contract purchasers listed on the purchase contract must sign the application.*

Sandi Balada

From: [redacted]
Sent: Tuesday, May 24, 2022 2:12 PM
To: David Scott
Cc: Monty Hurley; Jacki Herb; Sandi Balada
Subject: RE: The Cove at Lincoln City Extension
Attachments: 7432 20220520 Time Extension Form - NEW.pdf

Hi David,

In the time between our discussions with the City and when we submitted our extension application, the City started using a new extension form that we were unaware of. My apologies for the repeat request for this.

Can you please review/sign/return the attached new extension application form at your earliest convenience? Please let me know if there are any changes you'd like us to make.

Thanks.

Lawrence Pankey, PE, LSI
AKS ENGINEERING & FORESTRY, LLC
[redacted]

From: David Scott [redacted]
Sent: Friday, May 6, 2022 10:39 AM
To: Lawrence Pankey [redacted]
Cc: [redacted]
Subject: Re: The Cove at Lincoln City - Checking In

EXTERNAL EMAIL: This email originated from outside AKS Engineering & Forestry.

Looks solid, thank you

David Scott NMLS #157331
Attorney-At-Law
President
Silverado Funding, LLC NMLS #292151
[redacted]

On May 6, 2022, at 9:57 AM, Lawrence Pankey [redacted]

Hi David,

Per your request, please see attached draft letter intended to accompany the City land use extension application form.

Please feel free to reach out with any questions/comments/concerns.

Thanks.

Lawrence Pankey, PE, LSI
AKS ENGINEERING & FORESTRY, LLC
[redacted]

From: David Scott <[redacted]
Sent: Wednesday, May 4, 2022 11:22 AM
To: Lawrence Pankey [redacted]
Cc: [redacted]
Subject: RE: The Cove at Lincoln City - Checking In

EXTERNAL EMAIL: This email originated from outside AKS Engineering & Forestry.

Yes please

David C. Scott | President | Attorney-at-Law | Silverado Funding, LLC.
[redacted]

VCard

NMLS # 292152

Please note that this transmission may be: (1) subject to the Attorney-Client privilege, (2) an attorney work product (3) strictly confidential. If you are not the intended recipient of this message, you may not disclose, print, copy, or disseminate this information. If you have received this message in error, please reply and notify the sender (only) and delete this message.

Please consider the environment before printing this e-mail.

[redacted]

Subject: RE: The Cove at Lincoln City - Checking In

Received. Thanks, David!

Would you like to review a draft submittal package before it gets submitted to the City?

Thanks.

Lawrence Pankey, PE, LSI
AKS ENGINEERING & FORESTRY, LLC

[redacted]

[redacted]

EXTERNAL EMAIL: This email originated from outside AKS Engineering & Forestry.

Here you go, thank you

David C. Scott | President | Attorney-at-Law | Silverado Funding, LLC.

[redacted]

VCard

NMLS # 292152

Please note that this transmission may be: (1) subject to the Attorney-Client privilege, (2) an attorney work product (3) strictly confidential. If you are not the intended recipient of this message, you may not disclose, print, copy, or disseminate this information. If you have received this message in error, please reply and notify the sender (only) and delete this message.

Please consider the environment before printing this e-mail.

[redacted]

Hi David,

Agreed. Please see attached application form for signature. Please sign and return it at your earliest convenience.

There will be a brief narrative that will be submitted to accompany the application form. Please let me know if you'd like to review it before it gets submitted to the City for review.

Thanks.

Lawrence Pankey, PE, LSI
AKS ENGINEERING & FORESTRY, LLC
[redacted]

[redacted]

EXTERNAL EMAIL: This email originated from outside AKS Engineering & Forestry.

Thanks Lawrence for the check in. We should probably start on the extension track ?

Sent mobile

David Scott
Attorney-At-Law
President
Silverado Funding, LLC
[redacted]

[redacted]

Hi David,

It has been a little while since we last discussed The Cove, so I wanted to check in to see if you needed anything from us. Please don't hesitate to reach out if you do.

Thanks.

Lawrence Pankey, PE, LSI
AKS ENGINEERING & FORESTRY, LLC
[redacted]

NOTICE: This communication may contain privileged or other confidential information. If you have received it in error, please advise the sender by reply e-mail and immediately delete the message and any attachments without copying or disclosing the contents. AKS Engineering and Forestry shall not be liable for any changes made to the electronic data transferred. Distribution of electronic data to others is prohibited without the express written consent of AKS Engineering and Forestry.

Time Extension
Staff Report for Planning Commission Public Hearing on July 5, 2022
Case File VAR 2022-03

Date: June 28, 2022

Case File: EXT 2022-01 The Cove

Property Owners: Nandina & Co, LLC

Situs Address: Unaddressed

Location: South side of SE 16th St/SE Marine Ave, approximately 630 feet east of Hwy 101

Tax Map and Lot: 07-11-22-AA-06800-00

Comprehensive Plan Designation: High-Density Residential District (R-M)

Zoning District: Multiple-Unit Residential (R-M) Zone

Site Size: 3.41 acres

Proposal: Request to extend preliminary and final master plan/preliminary plat approval

Surrounding Land Uses and Zones:
North: Undeveloped; R-M
South: Apartments; R-M
East: Undeveloped, houses; R-1-7.5
West: House, North Lincoln Sanitary Service; R-M, PI

Authority: Lincoln City Municipal Code (LCMC) 17.76.020 states that all land use applications and approvals shall be decided by using Type I, II, III, or IV procedures. The procedure types govern the decision-making process for that application. Table 17.76.140-1 lists a time extension for a case that was originally a Type III procedure as a Type III procedure with the Planning Commission as the review authority.

Procedure: The application was received on May 31, 2022. The application was deemed complete on June 7, 2022. On June 14, 2022, pursuant to LCMC 17.76.050.E, the Planning and Community Development Department mailed a notice of public hearing to property owners within 250 feet of the subject property. The *News Guard* published the public hearing notice on June 21, 2022.

Applicable Substantive Criteria:
LCMC Section 17.76.050 Type III Procedure
LCMC Section 17.76.150 Extension of Decision

BACKGROUND

The subject property (site) is identified as Assessor's Map 07-11-22-AA-06800-00, unaddressed, and located on the south side of SE 16th St/SE Marine Ave approximately 630 feet east of Hwy 101. The site is undeveloped.

The site does not contain any bluff erosion hazards, aesthetic resource, floodway, flood hazard areas, or natural resource overlay zone. The site does contain wetlands, but they are not significant so there are no city requirements for these wetlands. The Oregon Department of State Lands has jurisdiction over non-significant wetlands.

North of the site is a platted subdivision for attached single-unit dwellings, with six lots containing dwellings and the remainder of the lots undeveloped. The area to the south is developed with residential uses, as is the area to the southeast. The area to the northeast is owned by the Siletz Tribe and is undeveloped. The area to the west is developed with either housing or North Lincoln Sanitary Services.

In 2020, the request for preliminary and final master plan/preliminary plat approval of PUD 2020-01/SUB 2020-01 The Cove was received and processed. The Planning Commission denied the request. Subsequently, the property owners appealed the denial, and City Council held a public hearing on the requested appeal on September 21, 2020. City Council approved the appeal request, thereby approving PUD 2020-01/SUB 2020-01. One of the conditions of approval was that the project was to be developed in one phase, with completion of required infrastructure and final plat recording by October 12, 2022. To date, no construction of the required infrastructure has commenced, nor has the final plat been submitted for review.

On May 31, 2022, the property owners submitted a completed time extension application to request approval of the one-time allowed time extension of the approved PUD 2020-01/SUB 2020-01.

COMMENTS

No comments were received.

ANALYSIS

Chapter 17.76 Procedures

17.76.050 Type III procedure

A. *General Description. Type III procedures apply to quasi-judicial permits and applications. Decisions on quasi-judicial permits and applications are made by either the planning commission or city council, and require substantial exercise of discretion and judgment in applying approval criteria. Type III procedures require public notice and one or more public hearings.*
B. *When Applicable. Table 17.76.020-1 identifies Type III applications. Applications not listed in Table 17.76.020-1 may be identified as Type III by the director based on the general description in this section.*
C. *Pre-Application Conference. A pre-application conference is not required prior to application submittal of a Type III application, but is strongly encouraged. Guidelines for pre-application conferences are set forth in LCMC 17.76.090.*
D. *Application Requirements. Type III applications shall:*
    1. *Be submitted on application forms provided by the department and shall include all information, exhibits, plans, reports, and signatures requested on the application forms.*
    2. *Be accompanied by the required fee as adopted by city council resolution.*
    3. *Be subject to the completeness review procedure set forth in LCMC 17.76.110(D) and (E).*

Finding: The required application forms and materials were submitted, along with the required fee. The application was deemed complete in accordance with LCMC 17.76.110.D and E.

E. Notice of Public Hearing.

1. After a Type III application has been accepted as completed under LCMC 17.76.110(E), the department shall mail a written public notice to the following:

a. The applicant and applicant's representative;

b. Owner of record of the subject property;

c. Property owners of record within 250 feet of the perimeter property line of the property or properties subject to the application, using the most recently provided property tax assessment roll of the Lincoln County assessor's office as provided to the city to determine property owners of record; and

d. Any neighborhood or community organization or association recognized by the governing body and whose boundaries include the site.

e. At the discretion of the application, the department also shall provide notice to the Oregon Department of Land Conservation and Development.

Finding: The Planning and Community Development Department mailed the public notice of a public hearing to the parties noted in LCMC 17.76.050.E.1.a through e.

2. The notice of public hearing shall include the following:

a. A brief description of the request;

b. A list of the applicable criteria from the ordinance and the comprehensive plan that apply to the application at issue;

c. The street address or other easily understood geographical reference to the subject property;

d. The date, time, and location of the hearing;

e. A statement that failure of an issue to be raised in a hearing, in person or by letter, or failure to provide statements or evidence sufficient to afford the decision maker an opportunity to respond to the issue precludes appeal to the Board based on that issue;

f. The name of a department staff member to contact and the telephone number where additional information may be obtained;

g. A statement that a copy of the application, all documents and evidence submitted by or on behalf of the applicant, and applicable criteria are available for inspection at no cost and will be provided at reasonable cost;

h. A statement that a copy of the staff report will be available for inspection at no cost at least seven days prior to the hearing and will be provided at reasonable cost; and

i. A general explanation of the requirements for submission of testimony and the procedure for conduct of hearings.

3. The failure of a property owner to receive notice does not invalidate the land use action if the notice was sent.

Finding: The public notice of hearing contained all the information required in LCMC 17.76.050.E.2.a through i.

F. Public notices for Type III applications shall be mailed a minimum of 20 days prior to the first evidentiary public hearing.

Finding: The public hearing is scheduled for July 5, 2022. The public notice was mailed on June 14, 2022.

17.76.140 Expiration of decision

A. Unless a different period of time is established within the decision, or under subsection (D) of this section, a land use action or permit granted pursuant to this chapter expires and becomes void automatically as provided under Table 17.76.140-1 unless one of the following circumstances has occurred:

1. *Substantial construction, which includes required infrastructure construction, has begun and is actively in progress in compliance with the land use action or permit approval; or*

Finding: Substantial construction has not begun.

2. *The approved land use has commenced and is in active operation in compliance with any applicable conditions of approval; or*

Finding: The approved land use has not commenced.

3. *An extension application has been filed pursuant to LCMC 17.76.150; or*

Finding: The required extension application was filed pursuant to LCMC 17.76.150 on May 31, 2022.

4. *A copy of the recorded final plat has been submitted to the department within one year of approval of a partition or subdivision or a copy of the recorded survey map has been submitted to the department within one year of approval of the property line adjustment.*

Finding: A copy of the recorded final plat has not been submitted.

B. *If multiple applications are processed concurrently, the review authority shall specify in the notice of decision a uniform expiration period for the concurrent applications.*

Finding: The final order gave an expiration date of October 12, 2022.

C. *If a final local decision is on appeal, the effective date of the decision and corresponding valid period before expiration shall begin when the final decision is issued on the appeal.*

Finding: The final decision was issued in October 2020.

D. *A comprehensive plan amendment, map amendment, or zone change processed under LCMC 17.77.150 is not subject to expiration or extension.*

Finding: This is not applicable since the project is not a comprehensive plan amendment, map amendment, or zone change.

Table 17.76.140-1: Decision Expirations and Extensions

	Decision Expiration	***Extensions Allowed***	***Review Authority***
Type I	*1 year*	*None*	*Not applicable*
Type II	*2 years*	*One extension for 2 years*	*Director*
Type III	*2 years*	*One extension for 2 years*	*Planning commission*
Type IV	*None*	*Not applicable*	*Not applicable*

Finding: PUD 2020-01/SUB 2020-01 was a Type III procedure. Per Table 17.76.140-1, a time extension for a Type III procedure is also a Type III procedure with the Planning Commission as the review authority. The allowance is for one time extension of 2 years. The final order of PUD 2020-01/SUB 2020-01 gives an

expiration date of October 12, 2022. If the time extension request is approved, the new expiration date would be October 12, 2024.

17.76.150 Extension of decision

A. *Written Request for Extension Required. A request for an extension of the expiration date of a decision must be submitted to the department, on the appropriate form provided by the department, prior to the expiration date of the decision.*

Finding: Final Order 2020-03 states that the project shall be completed in one phase, with completion of required infrastructure and final plat recording by October 12, 2022. To date, installation of required infrastructure has not commenced, nor has the final plat been submitted for review. The property owners completed the required time extension application form and submitted it on May 31, 2022, which is prior to the expiration date. This requirement is met.

B. *Extension. One extension request may be granted for the applicable period of time as specified in Table 17.76.140-1. If granted, an extension is vested against any code changes adopted since the original decision. The extension is subject to the following approval criteria:*
   1. *The extension is necessary because it is not practicable to begin development within the allowed time for reasons beyond the applicant's reasonable control; and*
   2. *The previous land use decision will not be modified in design, use, or conditions of approval.*

Finding: Table 17.76.140-1 allows for one extension. The extension moves the expiration date to October 12, 2024. The applicant states the following in the submitted application:

> "The Applicant met with City staff to discuss this project in May of 2019 and submitted a land use application to the City of Lincoln City on February 18, 2020; just a few weeks before the governor of Oregon declared a state of emergency due to the COVID-19 pandemic and issued a stay-at-home order. Believing the pandemic would be over shortly, the Applicant proceeded with the project and it was approved in October 2020. However at the time of the approval, there were still many COVID-19 restrictions in place and the pandemic was creating unforeseen economic impacts (business closures, market uncertainty, and supply chain issues to name a few) that were being felt throughout the state. Because of these unforeseen circumstances, the project has been delayed."

Staff concurs with the statements issued by the applicant. In addition, staff notes that the economy is in a state of unrest with inflation and increased interest rates. The war between Ukraine and Russia has contributed to the economic unrest. Other projects in the city have been delayed or significantly changed due to increased costs in construction materials, so this project is not alone in the impacts of COVID-19, the war, economy, etc.

RECOMMENDATION

Staff recommends that the Planning Commission hold a public hearing on the time extension request, take public testimony, close the public hearing, deliberate, and determine whether the time extension request complies with the criteria for granting approval of the request or doesn't comply with the criteria.

Staff feels the criteria for granting approval have been met and recommends approval of the request.

BEFORE THE CITY COUNCIL OF

THE CITY OF LINCOLN CITY

OCTOBER 12, 2020

In the Matter of an Appeal of the Decision of the	)	
City of Lincoln City Planning Commission's	)	FINAL ORDER
Denial of an Application for Tentative Subdivision	)	No. 2020-03
Plat, PUD Preliminary Master Plan and Final	)	
Master Plan Approval for "The Cove Phase III"	)	

I. NATURE OF PROCEEDING

This matter came before the Lincoln City City Council for an appeal hearing. The appeal was from a decision of the Lincoln City Planning Commission in its case file SUB 2020-01 and PUD 2020-01, denying approval of a tentative subdivision plat, a Planned Unit Development Preliminary Master Plan, and a Planned Unit Development Final Master Plan for a 40-lot development known as "The Cove, Phase III." The City Council heard the appeal in a *de novo* hearing.

Based upon the evidence in the whole record, the City Council makes the following findings of fact and conclusions of law:

II. FINDINGS OF FACT

1. The Nature of Proceeding set forth above is true and correct and is incorporated herein by this reference.
2. The subject of the appeal is a proposal to develop a 40-lot planned unit development subdivision on a 3.39 acre site south of SW 16th Street approximately 630 feet east of the SW 16th Street intersection with Highway 101. The property is shown on Lincoln County Assessor's map 07-11-22-AA as tax lot 06800.
3. The comprehensive plan designation of the subject property is High-Density Residential District (R-M) and the zoning designation of the property is Multiple-Family Residential (R-M) zone.

4. The Planning Commission held a public hearing on the application and denied the application.
5. The City Council held a public hearing on the appeal on September 21, 2020, at which time the council closed the public hearing. All persons were given an opportunity to testify orally and in writing.
6. At the request of a participant in the hearing the City Council held the record open until 5:00 p.m. on September 28, 2020.
7. The City Council deliberated in its meeting on September 28, 2020 and made a tentative decision.
8. On March 20, 2020, Planning and Community Development staff requested applicable agencies to provide written comments regarding the project no later than 5:00 p.m. March 30, 2020. North Lincoln Fire & Rescue District #1, Lincoln City Public Works, Lincoln County Survey Department, North Lincoln Sanitary, Oregon Department of Transportation (ODOT), and Oregon Department of State Lands (DSL) provided comments. All agency comments were included in the record before the City Council.
9. There is an existing pressurized main water line in both SE 16th Street and SE Marine Avenue, with five service lines from the pressurized main line and a blow off valve in the northeastern area of the site. There is an existing fire hydrant in the public right-of-way, adjacent to the northeastern corner of the site. There is an existing sanitary sewer gravity main line in both SE 16th Street and SE Marine Avenue, with five services lines from the gravity main line. There is an existing sanitary sewer manhole in the northeastern portion of the site, as well as five manholes in the SE 16th Street and SE Marine Avenue rights-of-way. There are two unverified storm catch basins located in the stub street in the northeastern corner of the site, as well as a private culvert approximately 33 feet south of the midpoint of the northern property line.
10. The applicant submitted a tentative plan, along with a tree preservation and removal plan, demolition plan, grading and erosion and sediment control plan, composite utility plan, street plan and cross sections, street profiles, and an aerial photograph plan.
11. The submitted preliminary subdivision plat shows the location, widths, and approximate radii of curves of the two proposed private streets. Public drainage easements, public utility easements, private storm drainage easements, and private pedestrian access easements are shown. The dimensions of the proposed lots are shown, along with proposed lot and block numbers and lot size. Lots will be used for attached single-unit dwellings. Tracts are shown for storage areas, private streets, and the recreation area.

12. Sheet P-03 of the submitted plan provides the following information pertaining to area coverage.

Total area =	147,668 square feet
Total anticipated future land coverage =	32,002 square feet
Total anticipated future land coverage =	22%
Streets =	27,509 square feet
Recreation area =	10,505 square feet
Storage area =	2,261 square feet

13. The submitted materials include a draft of the declaration of covenants, conditions, and restrictions for the development. Sheet P-08 of the submitted plan set is the preliminary street plan. Sheet P-09 of the submitted plan set is the preliminary street profile. Sheet P-07, which is the composite utility plan, shows the proposed sanitary sewer, storm drains, and water lines. The existing fire hydrant in the northeastern corner of the site will remain. Existing water services and sanitary sewer laterals will remain. Storm water filtration planters are proposed, along with storm water cleanouts, a 10-foot-wide private storm drainage easement, single water service and meters for each lot, and single sanitary sewer services for each lot. The plans do not show any property intended for dedication to the city or public, and no such dedications are required.
14. The requested density of 40 lots does not exceed the maximum allowable density of 64 lots, so no residential density bonuses or affordable housing bonuses are requested or needed. The allowable density requirement is met.
15. The property is owned by The Cove at Lincoln City, LLC, and that it is anticipated that ownership will remain unchanged until future homes are constructed and sold.
16. A preliminary landscape plan is included in the submitted plan set, identified as Sheet P-15 Preliminary Landscape Plan. There is a note on Sheet P-15 that states: "All on-site areas outside of planned impervious areas, future building footprints, and stormwater facilities to be landscaped per LCMC 17.52.100." The preliminary landscape plan does not provide planting details, irrigation details, species or numbers of plants to be planted, existing vegetation to remain, trees to be planted, or trees to remain. The submitted preliminary landscape plan does not provide enough detail to determine if it meets the code requirements or not.
17. The applicant stated the following in the completeness response letter: "A conceptual neighborhood circulation plan is included in the Preliminary Plans. This application involves the creation of a subdivision for the future construction of 40 attached single-family homes. 40 attached single-family units creates 22 pm peak hour trips based on ITC Category 220 (10th Edition Trip Generation Manual). This does not meet the requirements for a Traffic Impact Study as detailed in

Section 17.52.300 of the Lincoln City Municipal Code. As shown on the chart in the 10th Edition Trip Generation Manual for ITC Category 220 (copy enclosed), the average rate of pm peak hours is 0.56. Therefore 40 attached single-family homes would be anticipated to generate 22 pm peak hour trips, well under the threshold requirements for a TIS pursuant to Section 17.52.300 of 50 pm peak hour trips. This is consistent with the direction provided by City engineering staff at the pre-application conference."

18. Staff confirmed the proposed project does not meet any of the thresholds listed in LCMC 17.52.300 that require a traffic impact analysis. The required circulation plan is included with the applicant's submitted plans as Sheet P-14, showing the traffic flow entering and exiting the proposed development.
19. The applicant supplemented the original application with a traffic memo that addressed the traffic concerns raised at the Planning Commission.
20. Regarding phasing, the applicant stated: "This application includes concurrent processing of a Preliminary and Final Master Plan and is intended to be completed in one single stage. The Applicant intends to begin construction as soon as practicable and as the market allows."
21. Sheet P-04 of the applicant's submitted plan set is labeled as the "Preliminary Tree Preservation and Removal Plan" showing the topography of the site, the existing trees to be preserved, the existing trees to be removed, and the tree protection method during construction. The sheet showed that the majority of the trees on the site would be removed in the course of preparing the property for installation of infrastructure and dwellings.
22. Sheet P-04 of the applicant's submitted plan set showed tree protection/construction fencing around the tree protection areas containing the existing trees to be preserved. A detail of the protection/construction fencing is also shown, along with three notes pertaining to the tree protection device, installation of said tree protection, and maintenance of said fencing throughout construction.
23. The applicant did not provide any information in the landscaping plan regarding tree plantings. As a condition of approval, a detailed final landscaping plan showing proposed tree plantings shall be submitted as part of the final engineering plans.
24. With the exception of a detailed landscape plan and a specific date for completion, all required information was submitted. The requirement for the detailed final landscape plan (which includes tree planting details) and a date for substantial completion are not waived and are addressed in a condition of approval.

25. The lots to the north of the subject site are part of The Cove at Lincoln City, platted in 2009, and The Cove at Lincoln City, Phase II, platted in 2018, and zoned R-M. These two subdivisions total 28 lots that were developed for attached single-family dwellings. The infrastructure is installed, and six of the 28 lots have dwellings constructed on them leaving 22 lots ready for construction.
26. The properties to the south of the subject site are zoned R-M and are developed as apartments. The properties to the east of the site are zoned R-1-7.5. The parcel to the northeast is owned by the Confederated Tribe of Siletz Indians and is undeveloped. Allowed uses in the R-1-7.5 zone include attached and detached single-family dwellings, duplexes, manufactured homes, cottage housing developments, and four-flat dwellings. The lots to the southeast are part of a developed subdivision (Pacific Ridge, 31 lots, platted in 1999) for detached single-family dwellings, and most of the lots have existing structures.
27. The properties to the west of the site are zoned R-M. The parcel to the northwest is zoned R-M and contains a dwelling. The parcel immediately adjacent to the western boundary of the site is zoned R-M and is an undeveloped narrow rectangular strip of land. Further west are three parcels, all of which are zoned PI. Two of the three have businesses, and the third is undeveloped.
28. The areas immediately adjacent to the site are zoned for residential uses. Most of the immediately-adjacent areas are platted subdivisions for either attached or detached single-family dwellings and either currently contain dwellings are ready for construction upon submittal and issuance of a structural permit. The exception is the undeveloped parcel to the northeast, but this parcel is a residential zone which allows for attached single-family dwellings should the property owner so desire. The proposed project is for 40 lots for future construction of attached single-family dwellings, with lot sizes similar to the lot sizes of the adjacent subdivisions to the north. This is compatible with the developments and allowed uses of the immediately-adjacent properties, since they are all residential in use (or zone if not yet developed).
29. The applicant did not provide a date for completion, only stating "as soon as practicable and as the market allows" and in one phase. The ordinance states the planning commission shall establish an expiration date for the preliminary master plan approval, not sooner than two years after approval of the preliminary master plan and may impose a condition requiring that a final master plan be submitted for commission review not sooner than one year after approval of the preliminary master plan. Development of the project in one phase over the next two years, with completion of infrastructure and final plat recording no later than two years

from the date of preliminary master plan approval, meets this criterion. A condition of approval sets a two-year completion period.

30. The impacts to the surrounding area from the activities related to the installation and construction of the required infrastructure and the site's development must not be unreasonable. The municipal code sets some requirements that limit such impacts, and the applicant will be required to comply with them. The municipal code prohibits open burning. The municipal code has prohibitions and limitation on construction track-out. The municipal code has a noise ordinance limiting noise between specified hours. Grading and filling can have adverse impact on properties in close proximity; however, this is a relatively small subdivision to be completed in one phase, and a grading and erosion control plan that meets city standards must be adhered to all times during the construction of the project to reduce potential negative impacts to adjacent properties.
31. The impacts of the development itself once completed and in use, as opposed to the impacts experienced while the development is under construction, also must not be unreasonable. Once the development is completed and in use, those properties that will experience the greatest impact will be the immediately-adjacent lots and parcels, which are those in The Cove at Lincoln City, The Cove at Lincoln City Phase II, Pacific Ridge, Cedar Crest Townhomes, and the single-family dwelling to the northwest of the site. This project will necessitate the removal of the existing trees and vegetation for required infrastructure improvements, installation of sewer and water lines and services to the lots, and placement of houses and driveways, thus removing the existing natural vegetative cover between the project site and the adjacent properties. The preliminary landscaping plan does not specify the number, types, or locations of new or replacement plantings, but it does state that all on-site areas outside of planned impervious areas, future building footprints, and stormwater facilities will be landscaped per LCMC 17.52.100 as well as showing that undisturbed areas will maintain their natural vegetation. The city's landscape standards require landscaping on each individual lot as part of the construction process of the new dwelling.
32. The submitted circulation plan shows that residents of the dwellings will enter and exit the development in one of two ways. The site is accessed via SE 16th Street, which itself has access to Highway 101. Both are two-way, public streets. The site is also accessed from SE Marine Avenue via SE 14th Street. SE 14th Street intersects with Highway 101. Both SE Marine Avenue and SE 14th Street are two-way, public streets. SE 16th Street, SE 14th Street, and SE Marine Avenue will see an increase in traffic as a result of the 40 new attached single-family dwellings,

once they are all constructed occupied. However, pursuant to LCMC 17.52.300, a traffic impact study is not required as this project does not involve an amendment to the comprehensive plan or zoning map; a new direct property approach road to Highway 101; generation of 50 or more p.m. peak-hour trips on Highway 101, or 100 or more p.m. peak-hour trips on the local transportation system according to the Institute of Transportation Engineers (ITE) Trip Generation Manual; use on any street or direct property approach road intersecting with Highway 101 increasing by 10 vehicles or more per day that exceed 20,000pounds gross vehicle weight; an existing or proposed access driveway that does not meet minimum spacing or sight distance requirements; or a change in internal traffic patterns.

33. The submitted street plans, profiles, and sections show construction of required street frontage improvements. The required improvements include paving, curb, gutter, and sidewalk along the site's SE 16th Street frontage and SE Marine Avenue frontage. City standards do not require street frontage improvements to portions of any street that do not front the subject site.
34. Comments were received from Gary Hunt regarding removal of the trees on the site and the impact of the traffic, specifically regarding the narrow width of Marine Avenue and the lack of traffic being able to flow if a car is parked on each side of the street across from each other. The city code has provisions for removal of trees for development. The city code has standards for public streets. The project does not meet the criteria for requiring a traffic impact study.
35. Comments were received from Laura Quillman. Ms. Quillman wondered about the number of lots and the type of structures proposed, as well as a question related to changes to allow safe egress and ingress from the development onto a street that currently allows parking along the curb on the north side. The number of proposed lots meets the density requirements for the Multiple-Family Residential (R-M) zone. Attached single-family dwellings are proposed, and they are a permitted use in the R-M zone. There are no design requirements for attached single-family dwellings other than providing two features as specified LCMC 17.52.260. The width of streets, the placement of approaches, and designated "no parking" zones are determined by city standards administered by the Public Works Department.
36. Comments were received from Tina French expressing concern with future residents being concerned with the noise from the nearby North Lincoln Sanitary Service business. Staff notes that North Lincoln Sanitary Service is a permitted use in the zone in which it is located, the Planned Industrial (PI) zone. The subject

property is in the R-M zone, and the proposed use of attached single-family dwellings is a permitted use in the R-M zone.

37. The code does not require a traffic impact study for the project. There is a developed public street system in place to access the site. The code has requirements for development to construct its proportionate share of any street frontage improvements. The proportionate share is that street frontage adjacent to the site. Larger projects that trigger a traffic impact study may have larger proportionate shares of street frontage improvements, but in this case, a traffic impact study is not required due to the small size of the development.
38. The site is served by city water. The city's water system has capacity to accommodate an additional 40 houses without negative impact to the site, the surrounding area, or the city itself.
39. The site is served by city sewer. The city's sewer system has capacity to accommodate an additional 40 houses without negative impact to the site, the surround area, or the city itself.
40. The site has an unnamed creek that flows through wetlands along much of its length. These wetlands are on the city's Natural Resource Overlay Zone maps as significant wetlands. Staff is unaware of any problems with this drainage way.
41. LCMC 17.46.040.B prohibits activities that would alter the hydrology of a significant wetland, or that would introduce sediment or lead to erosion. The applicant has submitted a drainage plan that will maintain pre-development water flow from the site, storing water during storms, then releasing it at a rate no greater than the pre-development rate. Staff has determined that because the applicant has shown the project has the capability, through the engineering of appropriate drainage facilities, to avoid adding flooding or overflow to the surrounding area, and is required to do so, that this part of this criterion is met.
42. The proposed streets appear to be adequate with respect to capacity for the proposed project. City standards govern the design of the streets. The applicant submitted a preliminary street plan that has been reviewed by the Public Works Department, North Lincoln Fire and Rescue, North Lincoln Sanitary Service, and the Department of State Lands. Those departments or agencies have provided comments and recommended conditions of approval pertinent to the street plan.
43. The applicant included preliminary utility plans showing utility services to each lot. City standards govern the design of the water, sewer, drainage, drainage pre-treatment, and storm water detention facilities. The plans have been reviewed by the Public Works Department, North Lincoln Fire and Rescue, North Lincoln Sanitary Service, and the Department of State Lands. Those departments or

agencies have provided comments and recommended conditions of approval pertinent to the utility plan.

44. The maximum allowable density for the site is 64 lots. The project proposes only 40 lots. The gross area of the site is 147,688 square feet and 15 percent of 147,688 is 22,153.2. The submitted preliminary plat states the total site area and the square footages for streets, recreation area, storage area, and anticipated future structures, but it does not list the percentage of area devoted to landscaping or protected resource areas.
45. The final master plan does not include a detailed landscape plan. However, given that the landscaping requirements are clear and objective and require no discretion to determine whether they are met, this may be addressed through a condition of approval and such a condition of approval is provided.
46. Since the preliminary master plan and the final master plan are the same plan, the final master plan is consistent with the preliminary master plan.

III. CONDITIONS OF APPROVAL

1. The project shall be developed in one phase, with completion of required infrastructure and final plat recording by October 12, 2022.
2. A detailed final landscaping plan that shows compliance with the landscaping requirements listed in city code shall be submitted to the Planning Department concurrent with the submittal of the final engineering plans to the Public Works Department. Specifically, the detailed final landscaping plan shall show at least 22,153.20 square feet of the site devoted to landscaping, of which the wetland area may be included.
3. Trees to be removed shall be removed in compliance with Lincoln City Municipal Code 17.52.220.F.9.
4. The project shall comply with the Oregon Department of State Lands (DSL) removal fill law, including requirements noted in DSL's response to this project.
5. With submittal of the final engineering plans, the applicant shall submit a waste disposal plan that has been approved by North Lincoln Sanitary Service that allows sufficient accessibility for collection vehicles to service the development. Approval from North Lincoln Sanitary Service shall consist of Lon French's signature and date of signature on the waste disposal plan, with a statement that he has approved the plan as shown.
6. The project plan set submitted with the request for review of the final engineering plans shall show compliance with 2019 Oregon Fire Code 503 and Appendix D for Fire Apparatus Access Roads, and 2019 Oregon Fire Code 507 and Appendix C for Fire Protection Water Supplies for one- and two-family dwellings.

7. The applicant shall submit two copies of engineering plans for all public improvements and site development to the Department of Public Works for review and approval. These shall either be approved as submitted or modified in accordance with requirements of the City Engineer. Plans shall be stamped by a licensed professional engineer. The City Engineer's review and any required modifications shall be for assuring that the improvements shall be consistent with Lincoln City Public Works Standards and the provisions of this condition of approval.
8. Prior to issuance of any structural permits, any site work, any construction activity, or any demolition, clearing, grubbing, or excavating, a Combined Public Works Permit application shall be submitted. The Combined Public Works Permit application shall be submitted with each and every structural permit application. Al right-of-way work planned shall be noted on the approved plans and performed as shown.
9. The approved plan set and permits shall be kept on the site, at all times, until construction is complete and all final inspections have been passed. Any changes to the approved engineering plans affecting public improvements or utilities shall be submitted to the Lincoln City Public Works Department for approval prior to construction of altered facilities.
10. **Within 30 days after construction**, field verified, engineer stamped as-builts for all public improvements, including relevant survey data, shall be proved to the Lincoln City Public Works Department in AutoCAD format. All discovered utilities and changes to the approved engineering plans shall be noted with callouts indicating location, depth, and material. **The record drawings shall be established in model space using the state plan coordinate system, Oregon North Zone 3601, with horizontal survey control of NAD 83 and vertical control of NAVD 88.**
11. The applicant shall submit two copies of erosion control plans to the Lincoln City Public Works Department. The City Engineer will review all erosion control plans and approve if compliant with city standards. Approved soil erosion control measures must be in place and inspected by the Lincoln City Department of Public Works prior to any construction activities.
12. The project site exceeds one or more acres of land disturbance throughout construction. The applicant is responsible for application for, acquisition of, and compliance with an Oregon DEQ 1200-C Stormwater permit.
13. A net cut/fill calculation shall be completed and submitted with the application. If net cut exceeds 5,000 CY, the proposed permitted fill disposal site shall be identified by the applicant.

14. Compaction procedures, including proposed compaction method, implementation plan, and compaction testing plan shall be submitted with the engineered grading plan.
15. Planting and slope stabilization shall be completed per the final landscape plan for finished slopes prior to final approval by the Lincoln City Public Works Department. Additional planting and slope stabilization measures for grades exceeding 1:2 shall be implemented by the applicant as needed.
16. New sidewalk, curb, and gutter, and necessary pavement repair shall be completed along the site's SE Marine Avenue street frontage in compliance with LCMC 17.52.230. All city right-of-way work planned shall be noted on the approved engineering plan set and performed as shown and approved. Work shall include:
    a. Construction of sidewalk improvements per LCPW standards along the full subdivision boundary of SE Marine Ave. This shall include ADA-accessible transitions at all sidewalk terminations, ADA compliant directional curb ramp installation on both sides of the intersection of Private Street "A" and SE Marine Ave, and sidewalk/driveway compliance with state and federal Public Right-of-Way Accessible Guidelines.
    b. Full roadway improvement per LCMC 17.52.230 shall be constructed on SE Marine Avenue and SE 16th Street for all right-of-way adjacent to the subject site's boundaries. This shall include construction of sidewalk, curb, gutter, and 20-foot-wide asphalt concrete paving (4" depth over 10" compacted aggregate base). Asphalt termination ramp shall be paved at the end of the walk heading west on SE 16th St.
17. The extents of SE Marine Ave being cut for multiple utility installations shall be repaired with a minimum 1 ½" overlay. Grinding shall be completed as needed to maintain curb exposure, drainage, and smooth transitions to the existing pavement. Trench cuts shall have a finished asphalt depth of 4 inches minimum.
18. Required clear vision triangle areas shall be maintained in site plan layout and shall be shown on final engineering plans.
19. All materials shall adhere to LCPW standards including, but not limited to: asphalt paving depth, aggregate base, striping, pipe, fittings, and structures.
20. Required street signage shall be provided and installed by the property owner, including street name signs, stop signs, and no parking signs.
    a. "No Parking" signs shall be displayed on either side of each roadway for Private Street "A," "B," and SE Marine Ave adjacent to the subdivision boundary.
    b. "Stop" signs and thermoplastic stop bars shall be added on Private Street "A" and "B" at the proposed "tee" intersections.

c. Street signs indicating the approved street names and SE Marine Ave shall be placed on treated, 4"x4" posts at back of walk.

21. Any and all street lighting shall be the responsibility of the developer and maintained by the HOA.
22. Private Street "A" and "B" maintenance responsibility shall be clearly delegated to the HOA formed for the planned unit development.
23. Private Street "B" shall be constructed with a standard curb return, consistent with adjacent subdivisions and Lincoln City Public Works street standards. Curb return radius shall be a minimum of 15 feet, according to the local-to-local LCPW Streets Design Standards.
24. Vehicle traffic generated from construction shall be restricted from utilizing SE 16th St as ingress and egress during subdivision development. If the use of SE 16th St is desired as regular ingress and egress, the developer shall notify Lincoln City Public Works and agree to maintenance and upkeep of the street throughout the course of construction, including but not limited to replacement of gravel.
25. All new impervious paving shall be treated according to the Lincoln City Public works Stormwater Design Standards. Treatment shall be sized according 50% of the 2-year, 24-hour rain event.
26. All increase from the existing sites total impervious area shall be detained according to Lincoln City Public Works Stormwater Design Standards: 2-year, 10-year, 25-year 24-hour rain event OR calculations shall be submitted demonstrating dispersion to pre-development flows prior to storm system termination.
27. Calculations for conveyance, infiltration, detention, water quality, and drainage facilities shall be submitted with permit application and demonstrate that the system is capable of handling the increased flows and/or proposed work on the system will adequately increase system size.
28. Curb breaks and/or catch basins shall be noted in gutter line to identify roadway flow into the proposed stormwater planters.
29. Engineered Detail & Typ. Cross-section of proposed stormwater filtration planters shall be submitted with the final engineering plans. Detail shall be adequate for future construction and, at a minimum, shall address (1) proposed construction, material, media, & depth of planter (2) sizing & fulfillment of stormwater detention requirements, (3) adequate accommodation of slopes proposed around infiltration planters, and (4) proposed piping into & out of planters.
30. No blind tees or bends shall be installed in sewer systems. Manholes or cleanouts shall be placed at all bends. (See private street "A")
31. All Sanitary Sewer access points shall be pre-cast, 48" diameter manholes with standard frame and lid (two-hole) constructed per Oregon standard detail RD338. No cleanouts shall be allowed.

32. Cleanouts shall be installed at the property line as noted. End of pipe shall be marked with green painted 2"x4" set flush with finished grade.
33. Sanitary Sewer plans shall be additionally submitted to Oregon DEQ for approval. Applicant shall be responsible for adhering to any additional approval conditions. After construction, facilities shall be flushed, pressure tested, TV-ed, and mandrelled according to the 2018 ODOT Standard specification. Manholes shall be vacuumed tested according to the 2018 ODOT Standard specification. TV footage and testing reports shall be submitted to LCPW with submission of required as-builts prior to final acceptance by LCPW.
34. The applicant is responsible for ensuring that requested fire and domestic service ensures adequate flow & pressure for required water supply. The applicant shall be responsible for conducting any flow tests required to establish water pressure and flow information. The applicant shall give the Public Works Department 48 hours advance notice of any flow testing to be performed. A water distribution city staff member shall be on site at the time of flow testing
35. Applicant is responsible for the verification of existing private infrastructure and any repairs required. Applicant shall be responsible for verification of existing utilities proposed for use.
36. All connections to the public water system, assemblies, and service line location shall be designed and completed according to Lincoln City Public Works Design Standards.
37. Material submittals for all public water improvements shall be submitted to LCPW for review and approval in accordance with LCPW Water Distribution standards.
38. All water meters shall be placed at back of walk, outside of the sidewalk.
39. Owner shall be responsible for all chlorination, pressure testing, and coordination with LCPW water distribution staff according to LCPW Standards.
40. All serviced lots must have frontage on proposed public utilities. Long service laterals parallel to the roadway will not be allowed.
41. Water line shall be looped between Private Streets "A" and "B" or an alternate as agreed to by the city engineer. Combination air vacuum/relief valves shall be placed as needed. Remaining dead end lines shall be sized appropriately for service and blow-offs designed at termination points according to LCPW water distribution standards.
42. Private roads shall note the required blanket utility and access easements on the final plat.
43. A Public Access/Stormwater/Utility easement shall be dedicated for any sidewalk/storm/sewer/water public infrastructure on private property. The easements shall be noted on the approved engineering plans as well as noted on the final plat.

44. Pursuant to LCMC 17.52.210, the timetable of development for the Planned Development must be reasonable. As the development is proceeding with concurrent Final Plan Approval, the code-required one year timetable for final plat applies, (with allowance for extension per the code). Infrastructure must be completed as provided per Title 16 and per applicable plat requirements (e.g. contract for construction). As for the vertical construction authorized in the Planned Development, a reasonable period of time for completion of all vertical construction is set at 5 years from the date of final subdivision plat approval. If the developer fails to meet this completion deadline, the developer must apply to the Planning Commission for reevaluation of as-yet-unbuilt portions of the development, for conformity with then-existing city zoning ordinance requirements in relation to then-existing conditions.

45. In accordance with the applicant's voluntary offer, the applicant shall provide a contribution to the City of $50,000 to be used for improvements to 16th street, said contribution to be received not later than 60 days after final plat approval.

IV. ORDER

In sum, the City Council finds and determines that the applications and supporting documents in the record for files SUB 2020-01 and PUD 2020-01, consisting of a tentative subdivision plat, a Planned Unit Development Preliminary Master Plan, and a Planned Unit Development Final Master Plan for a 40-lot development known as "The Cove, Phase III" to be located on the subject property, complies with the applicable criterion in the Lincoln City Municipal Code.

Accordingly, based on the above Findings of Fact and Conclusions of Law, and based upon the evidence in the whole record, **and expressly subject to the above specifically incorporated 45 conditions of approval,** the City Council hereby APPROVES the tentative subdivision plat, a Planned Unit Development Preliminary Master Plan, and a Planned Unit Development Final Master Plan for files SUB 2020-01 and PUD 2020-01. Strict compliance with the conditions of approval is required. Further, if any one or more of the conditions set forth or referenced above are found to be invalid, for any reason whatsoever, then this approval is denied.

ADOPTED THIS 12th DAY OF OCTOBER, 2020.

City of Lincoln City

Dick Anderson, Mayor

Signature authorized by vote of the full Council this 12th Day of October, 2020

ATTEST:
City Recorder

Approved as to form:

City Attorney

Date: Oct 16 2020